# SAP JUNCTIONS: A STEP-BY-STEP GUIDE USING PHYSIBEL TRISCO SOFTWARE AND BR497 VERSION 2

**Content**


**1. Introduction ..... 2**
**2. General principles ..... 2**
2.1.Loading junction geometry in DXF format ..... 2
2.2.Grid refinement ..... 3
2.3.Boundary conditions ..... 4
2.4.Air spaces ..... 4
2.5.Temperature factor, fRsi and critical temperature factor fc ..... 5
**3. E1 – Perforated steel lintel ..... 7**
3.1.Annex A: Calculation of equivalent thermal conductivity for perforated steel lintel ..... 10
3.2.Annex B: Simplified model compared with detailed model ..... 12
**4. E2 – Lintel (any other, excluding steel lintel with perforated steel) ..... 14**
**5. E3 – Window sill ..... 17**
**6. E4 – Window jamb ..... 20**
**7. E5a – Ground floor (slab on the ground) ..... 23**
7.1.Annex A: Temperature factor for 3D corner (wall-wall-slab on ground detail) ..... 29
**8. E5b - Ground floor (suspended ground slab) ..... 33**
**9. E6 – Intermediate floor same dwelling ..... 37**
**10. E7 – Intermediate floor between dwelling ..... 40**
**11. E10 – Eaves insulation at ceiling ..... 43**
**12. E11 – Eaves insulation at rafter ..... 46**
**13. E12 – Gable insulation at ceiling ..... 49**
**14. E13 – Pitched roof insulation at the rafter ..... 52**
**15. E16 – Normal wall corner ..... 56**
**16. E17 – Inverted wall corner ..... 59**
**17. E18 – Party wall between dwellings ..... 62**
**18. P1a - Party wall/ground-floor junction (slab on the ground) ..... 65**
18.1.Annex A: Increasing the adiabatic boundary condition depth of external wall ..... 72
18.1.1.Part 1: Adiabatic Condition at the level of party wall insulation ..... 72
18.1.2.Part 2: Adiabatic Condition extended 1m below part wall insulation level ..... 74
18.1.3.Discussion ..... 76
**19. P1b – Party wall/ground-floor junction (suspended floor) ..... 78**
**20. P4 – Party wall insulation at ceiling level ..... 85**
**21. P5 – Party wall insulation at rafter level ..... 89**

# 1. Introduction

This document serves as a guide for thermal bridge modelers following national guidelines in the **United Kingdom**.

For guidance on numerical modelling of thermal bridges, the UK Government's Standard Assessment Procedure (SAP) for Energy Rating of Dwellings refers to the BR497 manual by BRE. BR497 provides a framework for assessing thermal bridges based on international standards EN ISO 6946 and ISO 10211. While BR497 generally follows the core principles of ISO 10211, it introduces slight deviations. For this reason, it is important to mention that this document is specifically prepared for use in the UK market. It is advised to read this document together with BR497, as references to the relevant paragraphs will be made.

To support practitioners in the UK, this document presents step-by-step examples of the most common junctions using the TRISCO software, adhering to BR497 principles. The reference naming for junctions from SAP (Table K1) is maintained (e.g. a steel lintel detail is referred to as an E1 junction).

It is recommended to first read chapter 2, which covers general principles - such as geometry import, grid refinement, boundary conditions, and treatment of air spaces - that apply to all examples. Each subsequent chapter then focuses on a specific building junction.

Each example is accompanied by a DXF file, which can be directly loaded into TRISCO, as well as the final TRISCO files and calculation results. This allows the document to serve as a practical training resource for improving and evaluating TRISCO skills.

Kindly note, this guide is compatible with:

- BR497 Thermal Bridging Guide, 2nd Edition, BRE Press, 2016.
- Standard Assessment Procedure (SAP) Version 10.2, Released 11 April 2023.
- BRE Information Paper 1/06: Assessing the effects of thermal bridging at junctions and around openings, BRE Press, 2006.

# 2. General principles

## 2.1. Loading junction geometry in DXF format

For each example discussed in this document, a DXF file with the geometry is available. The DXF files are prepared in such way they can be directly imported into TRISCO by using TriscoDXF:

- Geometry in closed polylines, with each material in a separate layer.
- A prefix (colour number and fill mode) allowing linking materials and boundary conditions to the geometry (see also document H3 on the Physibel Knowledge Base).
- You may need to adjust the layer sequence for getting the correct colouring in line with the superposition principle.

The procedure of importing DXF files in TRISCO is explained in the Physibel Knowledge Base in tutorial (T-TRCb) and on the TRISCO YouTube channel.

When importing the DXF file, it is recommended to use the settings shown in Figure 1. The DXF files provided with this document are drawn in millimetres, which is indicated in the grid unit. It is best to place the component in its real orientation (upright = Z-orientation). Strictly speaking, this is not necessary for the calculation, but manipulating/rotating the model is more intuitive when it has its real orientation.

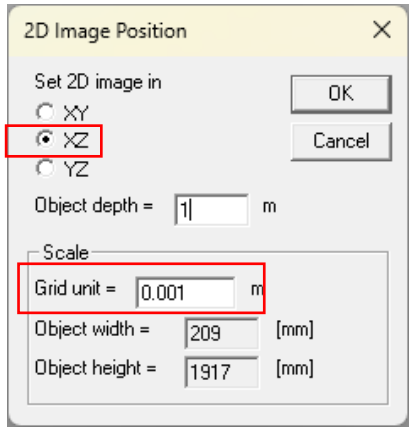


**Figure 1: 2D Image Position when importing the DXF file in TRISCO by using TriscoDXF**

### 2.2. Grid refinement

When a DXF file is imported into TRISCO (see section 2.1), the model is placed on its *Minimum grid*, which represents the coarsest mesh needed to define the geometry. For accurate numerical calculations, this grid must be refined. The *Grid → Auto Split…* function allows you to do this efficiently in a single step. With the settings shown in the image below, all grid elements smaller than 5 cm will be subdivided into 1 cm meshes. Further from material interfaces, the grid will be gradually coarsened by a factor of 1.5.

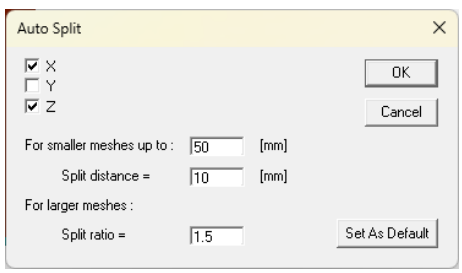


**Figure 2: Auto Split dialog box**

According to section 2.6 of BR497, the mesh's impact on the total heat flow should not exceed 1%, and its effect on the temperature factor should be no more than 0.005. To verify this, BR497 suggests refining the mesh by splitting each element in two and recalculating the system. This can be done by selecting all meshes (click the top row in the **Grid Window**), then choosing *Grid → Split…* to divide each mesh element into two subdivisions.

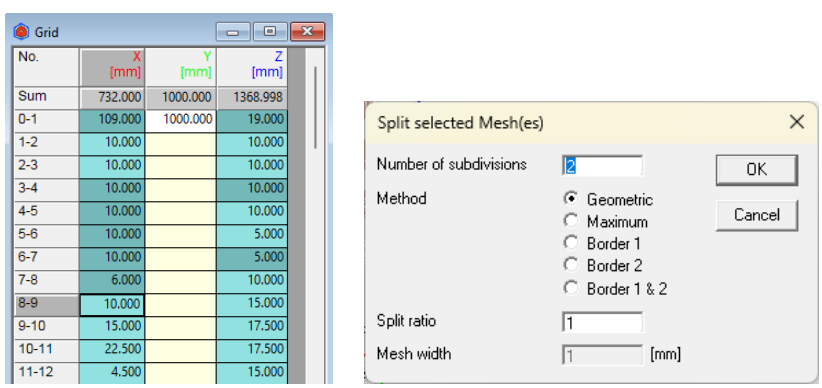


| No. | X [mm] | Y [mm] | Z [mm] |
|---|---|---|---|
| Sum | 732.000 | 1000.000 | 1368.998 |
| 0-1 | 109.000 | 1000.000 | 19.000 |
| 1-2 | 10.000 | | 10.000 |
| 2-3 | 10.000 | | 10.000 |
| 3-4 | 10.000 | | 10.000 |
| 4-5 | 10.000 | | 10.000 |
| 5-6 | 10.000 | | 5.000 |
| 6-7 | 10.000 | | 5.000 |
| 7-8 | 6.000 | | 10.000 |
| 8-9 | 10.000 | | 15.000 |
| 9-10 | 15.000 | | 17.500 |
| 10-11 | 22.500 | | 17.500 |
| 11-12 | 4.500 | | 15.000 |

**Figure 3: Left) selection of all mesh and right) Split selected Mesh(es)**

## 2.3. Boundary conditions

In TRISCO, boundary conditions are defined using blocks. Wherever a block linked to a boundary condition touches a material, that boundary condition is applied. Due to this principle, it is inevitable that overlaps occur when multiple boundary conditions meet at a geometric transition. BR497 limits such overlaps to 1 mm, and to just 0.1 mm in the case of metal thermal bridges. The figure below illustrates how adding a 1 mm grid ensures compliance with this criterion for a corner where horizontal heat flow (colour 174) occurs through the walls and upward heat flow (colour 190) through the roof.

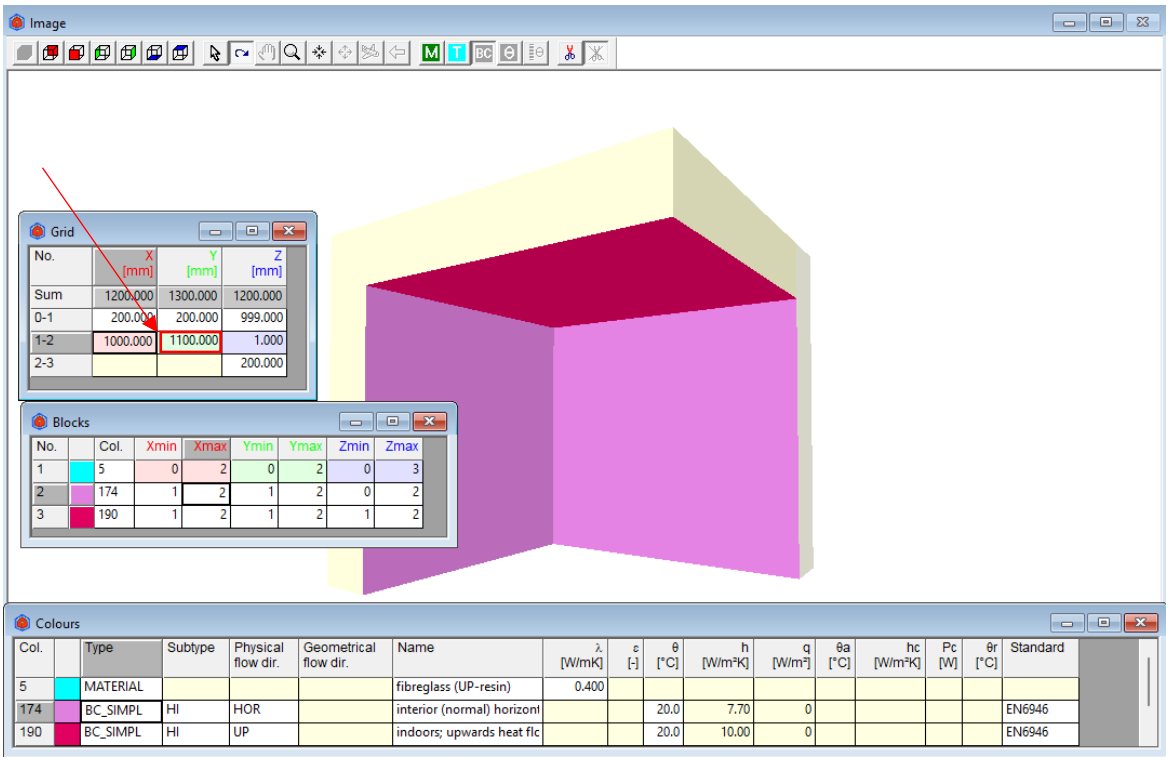


**Figure 4: Corner with horizontal heat flow at wall and upward heat flow at ceiling level**

## 2.4. Air spaces

BR497's approach to air spaces is largely based on the standards of EN ISO 6946; an air space may be modelled as an equivalent material in which the effects of convection and infrared radiation are included. BR497 differentiates between cavities ('irregular divided air spaces') and layers ('regular divided air spaces'). A layer is defined as an air space in which the thickness and width (and, in 3D models, length) are mutually orthogonal, and the ratio of width to thickness in the principal direction of heat flow is more than 10. In 3D thermal models, the width is taken as the smaller of the two dimensions orthogonal to the principal heat flow direction. In all other cases, the air space is classified as a cavity.

In addition, BR497 divides air spaces into non-ventilated and well-ventilated air spaces according to the following criterion:

- Non-ventilated air space: the openings to the external environment are < 1500mm² per m length (vertical layers) and per m² surface area (horizontal layers)
- Well-ventilated air space: the openings to the external environment are ≥1500mm² per m length (vertical layers) and per m² surface area (horizontal layers)

Non-ventilated cavities:

In the Physibel software both non-ventilated cavities and layers are predefined by the Type EQUIMAT with standard EN6946. For a non-ventilated cavity the Subtype is CAVITY and the user needs to define the physical flow direction (HOR, UP, DOWN) and the geometrical flow direction (uppercase letter = the heat flow direction, and lowercase letter = the direction parallel to the heat flow direction). In case low emissivity materials are used on the surrounding surfaces, these can be adjusted under 'ε1/ ε2'.

The software automatically calculates the equivalent thermal conductivity based on the geometry associated with each colour. Therefore, it is important to assign a unique colour to each air space. If multiple air spaces share the same colour, they can be separated by selecting the relevant colour in the **Colour window** and using the *Colours → Split zones...* function.

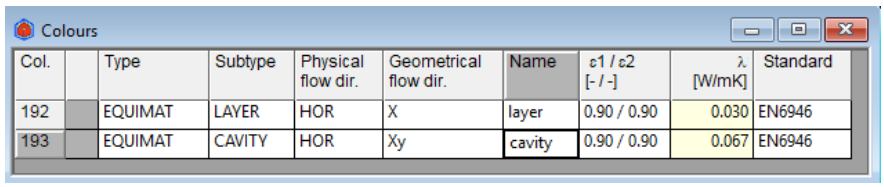

Colours

| Col. | | Type | Subtype | Physical flow dir. | Geometrical flow dir. | Name | ε1 / ε2 [- / -] | λ [W/mK] | Standard |
|---|---|---|---|---|---|---|---|---|---|
| 192 | | EQUIMAT | LAYER | HOR | X | layer | 0.90 / 0.90 | 0.030 | EN6946 |
| 193 | | EQUIMAT | CAVITY | HOR | Xy | cavity | 0.90 / 0.90 | 0.067 | EN6946 |

**Figure 5: Example of a layer (colour 192) and cavity (colour 193)**

Well-ventilated cavities:

For well-ventilated cavities, BR497 (based on EN ISO 6946) prescribes that the air space should be treated as a boundary condition with the outdoor temperature, but using the internal surface heat transfer coefficient. In the Physibel Colour database, the default colours for a well-ventilated cavity/layer are: 1) 185 for horizontal heat flow, 2) 175 for downward heat flow, and 3) 177 for upward heat flow.

An exception to the way air spaces are treated in BR497 compared to EN ISO 6946 occurs in the case of suspended floors. This special case is illustrated with an example in section 8 (junction E5b).

### 2.5. Temperature factor, $f_{R_{si}}$ and critical temperature factor $f_c$

There is an increased risk of surface condensation and mould growth at thermal bridges. The temperature factor is used to assess these risks. The formula for calculating temperature factor $f_{R_{si}}$ under steady state condition is:

$$f_{R_{si}} = \frac{T_{si} - T_e}{T_i - T_e}$$

where $T_{si}, T_e, T_i$ are the coldest interior surface temperature, the external temperature and the internal temperature respectively.

Surface resistance $R_{si}$ has significant effect on the calculated surface temperature. According to the BR497 it is essential to use the surface resistance appropriate to the element being analysed. These resistances are stated in section 2.5 in BR497.

The temperature factor must be higher than the critical temperature factor $f_c$ to avoid surface condensation or mould growth. BR497 refers to BRE information paper IP 1/06 for appropriate values of $f_c$ for different internal environments. Tables 1 and 2 present these values for the relevant types of buildings.

**Table 1 Critical temperature factors for avoiding mould growth in buildings**

| Type of building | $f_c$ |
|---|---|
| Dwellings; residential buildings; schools | 0.75 |
| Swimming pools (including a dwelling with an indoor pool) | 0.90 |

**Table 2 Critical temperature factors for limiting the risk of surface condensation**

| Type of building | $f_c$ |
|---|---|
| Storage buildings | 0.30 |
| Offices, retail premises | 0.50 |
| Sports halls, kitchens, canteens; buildings heated with un-flued gas heaters | 0.80 |
| Buildings with high humidity, e.g. swimming pools, laundries, breweries | 0.90 |

**Note:**

In three-dimensional corners of the ground floors the internal surface temperature drops very sharply in the corner. However the overall area where the internal surface temperature is less than the critical surface temperature is usually small. According to BRE information paper IP 1/06 it is appropriate to have relaxation (g=0.93) of the critical temperature factor $f_c$ to $f_c'$. So:

$$f_c' = g \ \text{x} \ f_c$$

and the condition to avoid surface condensation or mould growth becomes:

$$f_{R_{si}} > f_c'$$

According to BR497 and IP 1/06 for regulatory purposes there is a relaxation in distance from two corner junctions of 10 mm (in all directions). Only temperature factors beyond these 10mm zones need to be considered when comparing with $f_c'$. Thus in three-dimensional wall/wall/ground junctions both relaxations are coupled. For all other details these relaxations do not apply. Example 5a, Annex A (see section 7 and 7.1) illustrates this.

## 3. E1 – Perforated steel lintel

E1_STEEL_LINTEL.trc

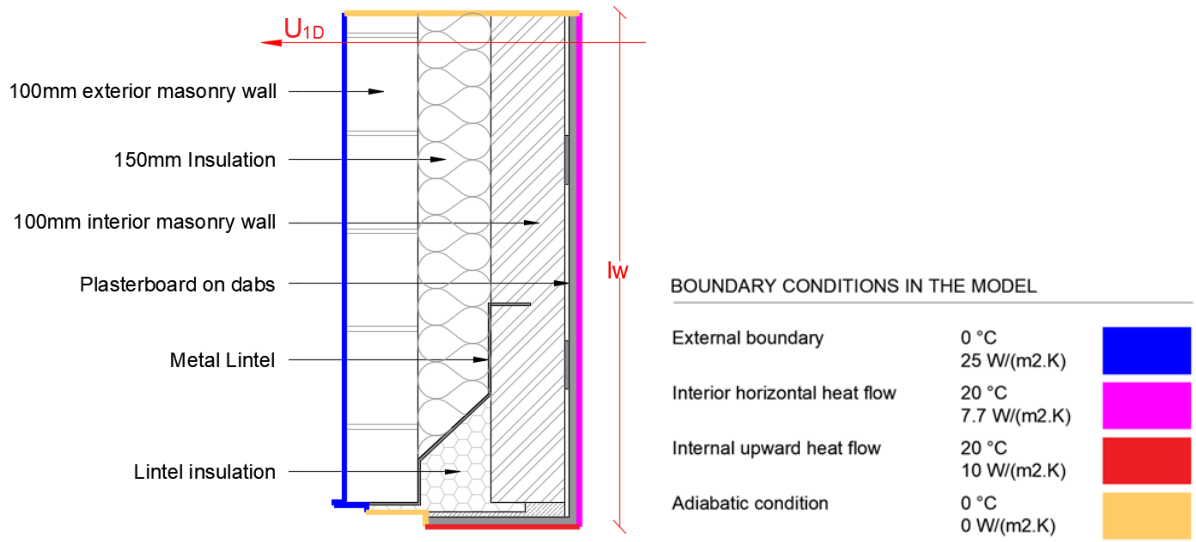


**Figure 6: Perforated steel lintel – Junction E1**

### Step 1: Identify junction type

- Steel lintel with perforated steel

### Step 2: Refer to appropriate conventions within BR497

- 4.3.1 Lintel (window head)
- 2.2.4 Sloped elements
- 2.3.1 Perforated plate
- 2.5 Boundary conditions

### Step 3: Prepare geometry in DXF format: E1_STEEL_LINTEL.dxf

See section 2.1 in this document.

### Step 4: Define material properties and boundary conditions

- For perforated metal lintels the geometry becomes 3D. To simplify this geometry, BR497 allows an equivalent conductivity to be calculated for a perforated metal lintel. This procedure is outlined in section 3.1 of the current document. The thermal conductivity of colour 19 which is used for the lintel can be adjusted to match the value of Figure 7 below. All other materials are defined from the Colour database.
- Boundary conditions and surface heat transfer coefficients are defined as per section 2.5 of BR497, see Figure 6 above.

Colours

| Col. | | Type | Subtype | Physical flow dir. | Geometrical flow dir. | Name | ε1 / ε2 [- / -] | λ [W/mK] | ε [-] | θ [°C] | h [W/m²K] | q [W/m²] | θa [°C] | hc [W/m²K] | Pc [W] | θr [°C] | Standard |
|---|---|---|---|---|---|---|---|---|---|---|---|---|---|---|---|---|---|
| 13 | | MATERIAL | | | | steel | | 50.000 | | | | | | | | | |
| 19 | | MATERIAL | | | | Perforated steel | | 41.420 | | | | | | | | | |
| 132 | | MATERIAL | | | | masonry light | | 0.220 | | | | | | | | | |
| 133 | | MATERIAL | | | | insulation 0.030 W/mK | | 0.030 | | | | | | | | | |
| 135 | | MATERIAL | | | | insulation 0.025 W/mK | | 0.025 | | | | | | | | | |
| 148 | | MATERIAL | | | | masonry medium density | | 0.320 | | | | | | | | | |
| 151 | | MATERIAL | | | | insulation 0.035 W/mK | | 0.035 | | | | | | | | | |
| 161 | | MATERIAL | | | | gypsum plasterboard | | 0.250 | | | | | | | | | |
| 170 | | BC_SIMPL | HE | | | exterior | | | | 0.0 | 25.00 | 0 | | | | | EN6946 |
| 174 | | BC_SIMPL | HI | HOR | | interior (normal) horizontal heat flow | | | | 20.0 | 7.70 | 0 | | | | | EN6946 |
| 190 | | BC_SIMPL | HI | UP | | indoors; upwards heat flow | | | | 20.0 | 10.00 | 0 | | | | | EN6946 |
| 191 | | BC_SIMPL | NIHIL | | | adiabatic | | | | 0.0 | 0.00 | 0 | | | | | NIHIL |
| 240 | | EQUIMAT | LAYER | HOR | X | | 0.90 / 0.90 | 0.071 | | | | | | | | | EN6946 |

**Figure 7: Materials and boundary condition properties for analysis**

### Step 5: Define the 1D U-value and areas of flanking elements

- Area of flanking elements are the internal dimensions (as per 2.2.2 of BR497).
  *Edit → Areas.*
- 1D U-values are defined at the edges of flanking elements.
  *Edit → U Values.*

Areas

| No. | Xmin | Xmax | Ymin | Ymax | Zmin | Zmax | A [m²] |
|---|---|---|---|---|---|---|---|
| 1 | 158 | 158 | 0 | 1 | 1 | 146 | 1.35 |
| 2 | 0 | 0 | 0 | 0 | 0 | 0 | 0 |
| 3 | 0 | 0 | 0 | 0 | 0 | 0 | 0 |

U Values

| No. | Xmin | Xmax | Ymin | Ymax | Zmin | Zmax | U [W/m²K] | Enforced U [W/m²K] |
|---|---|---|---|---|---|---|---|---|
| 1 | 1 | 158 | 0 | 0 | 146 | 146 | 0.153 | |
| 2 | 0 | 0 | 0 | 0 | 0 | 0 | 0.000 | |
| 3 | 0 | 0 | 0 | 0 | 0 | 0 | 0.000 | |

**Figure 8: Areas and 1D U-values of flanking element for analysis**

### Step 6: Define derived thermal properties and run the calculation

- Choose the output required to calculate from the analysis (Ψ-value / temperature factor ($f_{Rsi}$)).
  *Edit → Derived Thermal Properties…*
- Prepare the grid for analysis using 'Auto split' and then run the calculation.
  *Grid → Auto split…* (see section 2.2 for parameters)

### Note, as per BR497;

- Lintel details can be modelled without the window frame. The intersection of the frame and sill is taken as an adiabatic boundary (colour 191 in Physibel Colour Database).
- The length of the flanking element lw is either 1000mm or 3 times thickness of wall; whichever is greater.
- To avoid the problem of trying to model the perforations as part of a much larger model, the perforated metal plate can be separately modelled to obtain the effective thermal conductivity. The metal plate is then included in the large model as a solid material with an effective thermal conductivity. See section 3.1 of this document for the detailed procedure. In this example the resulting equivalent thermal conductivity of the perforated zone is 41.42 W/mK.
- The indoor boundary conditions are defined with two colour types: indoor horizontal (174) and indoor upward heat flow (190) (see Figure 6).

- The procedure to convert non-rectangular elements into orthogonal components is mentioned in section 2.2.4 of BR497. You could also refer to section 3.2 of this document for an applied example.

**Calculated Result from the analysis:**

Linear thermal transmittance (Ψ) = 0.193 W/mK

$$\Psi = \frac{\phi}{(Ti - Te)} - U1 \times A1 = \frac{7.99}{(20 - 0)} - 0.153 \times 1.35 = 0.193 \text{ W/mK}$$

Temperature factor ($f_{R_{si}}$)= 0.931 (Check section 2.5 for critical temperature factors $f_c$)

**Default Ψ (as per SAP version 10.2)**

Steel lintel with perforated steel = 1.0 W/mK

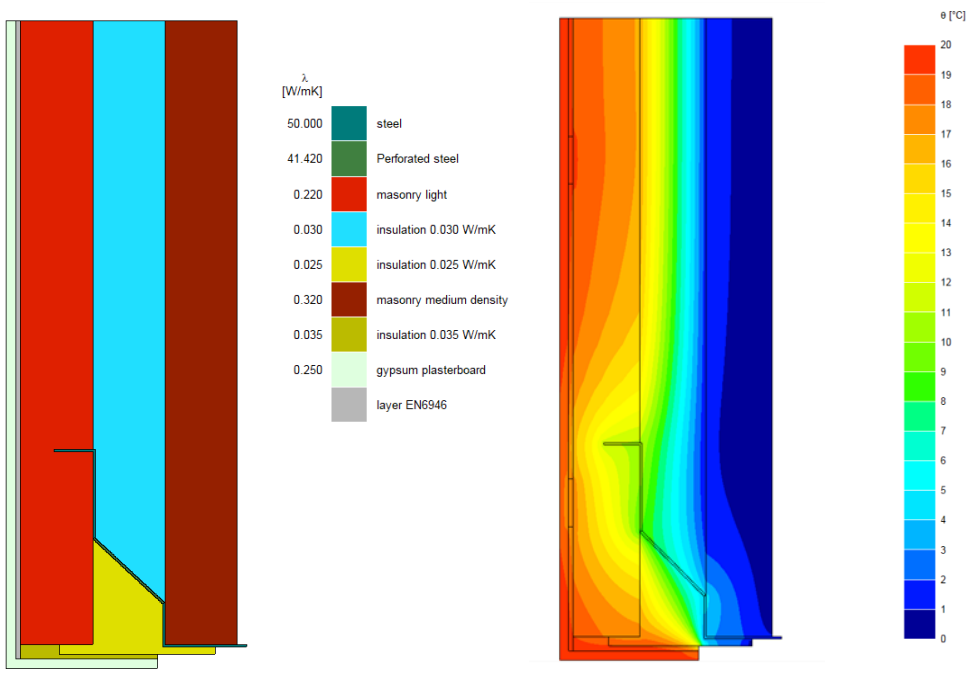


**Figure 9: Material properties and Isotherms**

### 3.1. Annex A: Calculation of equivalent thermal conductivity for perforated steel lintel

PERFORATED_LINTEL.trc

As stated in BR497, we calculate the equivalent conductivity for the perforated steel lintel in a separate model. Thereafter we apply this equivalent conductivity value to the lintel detail where the steel lintel is a solid without any perforation.

In this example we consider a case where the perforations are located only in the inclined part of the steel lintel.

**Step 1: Select a part of the perforated steel for analysis**

- In case the perforations don't have a repeating pattern, the entire perforated steel plate shall be modelled.
- In the case of repeating perforations on the steel lintel, a repeating module can be considered.
- The thickness of the selected portion (module) of perforated steel plate will have the same thickness as the actual steel lintel.

**Step 2: Apply Materials and boundary conditions**

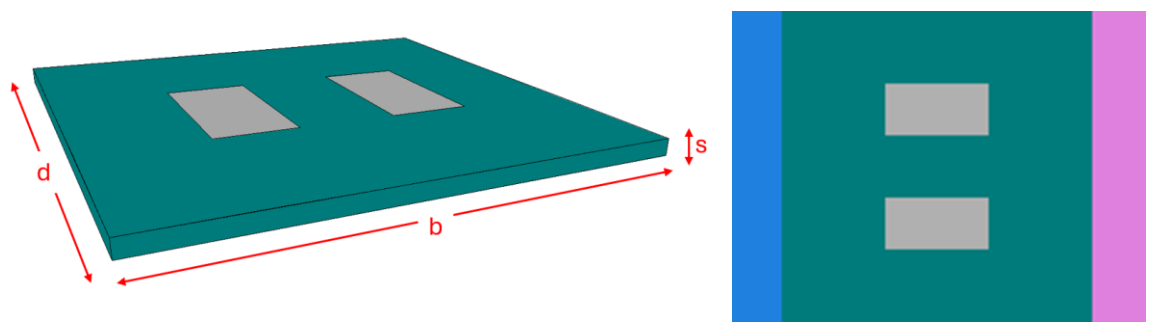


Colours

| Col. | | Type | Subtype | Physical flow dir. | Geometrical flow dir. | Name | ε1 / ε2 [- / -] | λ [W/mK] | ε [-] | θ [°C] | h [W/m²K] | q [W/m²] | θa [°C] | hc [W/m²K] | Pc [W] | θr [°C] | Standard |
|---|---|---|---|---|---|---|---|---|---|---|---|---|---|---|---|---|---|
| 13 | | MATERIAL | | | | steel | | 50.000 | | | | | | | | | |
| 170 | | BC_SIMPL | NIHIL | | | exterior | | | | 0.0 | 100000000.00 | 0 | | | | | NIHIL |
| 174 | | BC_SIMPL | NIHIL | | | interior (normal) horizontal heat flow | | | | 20.0 | 100000000.00 | 0 | | | | | NIHIL |
| 192 | | EQUIMAT | CAVITY | HOR | Xy | cavity non-vent physical horizontal flow | 0.90 / 0.90 | 0.199 | | | | | | | | | EN6946 |

**Figure 10: Module of perforated plate modelled in TRISCO**

- Since this portion of perforated plate forms part of the steel lintel, heat transfer occurs by conduction only. The boundary conditions (interior or exterior) are therefore used only to set the temperatures, together with a high global surface heat transfer coefficient (for example $h = 10^8$ W/m²K).

**Step 3: Calculate the total heat flow (Q)**

- Upon running the analysis, from the text output, note the Q value.
  *Output → Text Output → Thermal calculation Results tab.*

**Step 4: Calculate Equivalent Conductivity ($\lambda_{eq}$)**

After running the calculation, from the text output, calculate the equivalent conductivity, using the equation:

$$\phi = (b \times s \times \lambda_{eq} \times \Delta\theta)/d$$

$$\lambda_{eq} = (\phi \times d)/(b \times s \times \Delta\theta)$$

with, b = Width of analysis module (perpendicular to the heat flow) = 0.15m
s = Thickness of the section considered = 0.005 m
d = Depth of cross section considered = 0.15m
$\Phi$ = Simulated heat flow = 4.1426 W
$\Delta\theta$ = Temperature difference = 20 K

$$\lambda_{eq} = \frac{0.15 \times 4.14}{0.15 \times 0.005 \times 20} = 41.4\ \mathrm{W/mK}$$

Note: Validation of this procedure is described in detail at Physibel Knowledge Base: document C22.

### 3.2. Annex B: Simplified model compared with detailed model

E1_STEEL_LINTEL_SIMPLIFIED.trc

We take the example of the E1 perforated steel lintel project to simplify and approximate the steel lintel into rectangular elements. Part 2.2.4 of BR497, Non-rectangular elements, describes the procedure to approximate the sloped parts of geometry into rectangular elements. The key points to be noted are:

1. Using the notation shown in Figure 11, β is the angle of the slope and y/x = tan(β). If tan(β)> 1, i.e β>45°, then x<y, otherwise x>y.

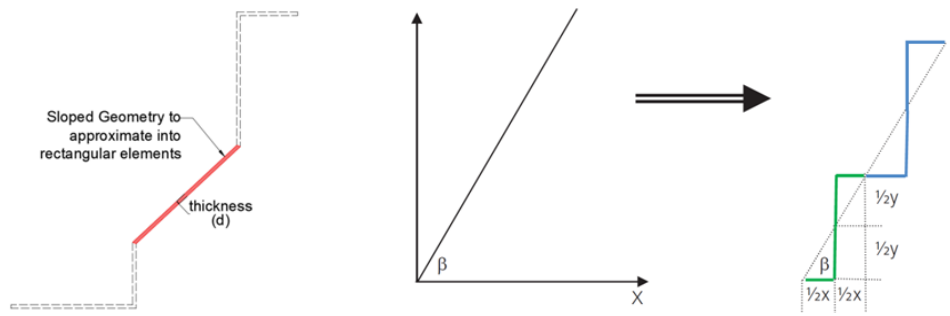


**Figure 11: Sub-divisions (x and y) to convert sloped geometry (of steel lintel) into rectangular elements**

2. If the thickness of the sloped part (d) is < 4 mm, it is categorised as a thin layer. The smaller of (x, y) must be no greater than 2.5 x d.
   If the thickness of the sloped part (d) is > 4mm, then it's not a thin layer. Then, the smaller of (x, y) must be no greater than 10mm.
3. The thickness of the stepped rectangular elements should be the same as that of the sloped steel lintel, which in this example is 5 mm.
4. Steps can be uniform or different to their adjacent ones, but it needs to have a whole number of complete steps between the start and end of the slope.
5. Depending on the precise connection of the sloping part with the non-sloping parts of the detail being modelled, the end(s) of one or more of the stepped lines along the slope may need to be extended (or shortened) to meet with the rest of the rectangular model.
6. The correct intersection of each step with the line of the slope being approximated should produce two equal triangles (one above and one below the line).

**Procedure to approximate sloped steel lintel into rectangular elements**

- Angle of inclination > 45, which means y>x. (Ref point 1).
- Steel lintel is 5mm thick, which falls under the category of 'not thin layers'. Hence x, (shorter side) can be a maximum of 10mm. (Ref point 2)
- We make vertical grid lines of spacing x/2, then draw a stepped line (represented with a green line in Figure 12) at centre of the sloped geometry (centre line represented with magenta colour).
- The thickness of the stepped elements should be the same as that of the sloped geometry.
- Repeat this stepped pattern along the sloped geometry.
- At the ends of sloped geometry, where it meets the non-sloping parts, extend the stepped elements at the ends to have a perfect intersection and a whole number of completed steps. (Ref to points 4 and 5).

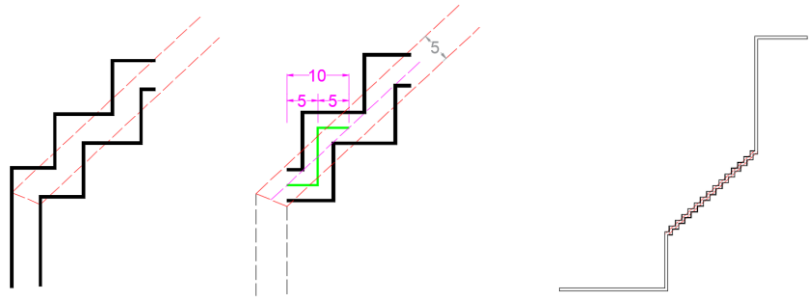


**Figure 12: Illustrating procedure to approximate steel lintel into rectangular elements**

**Calculated Result from the analysis: (approximated model with rectangles)**

Number of Nodes = 7698; Φ = 8.115 W

Linear thermal transmittance (Ψ) = 0.199 W/mK

$$\Psi = \frac{\phi}{(Ti - Te)} - U1 \times A1 = \frac{8.115}{(20 - 0)} - 0.153 \times 1.35 = 0.199 \text{ (W/mK)}$$

Temperature factor ($f_{R_{si}}$)= 0.930

**Calculated Result from the analysis of the detailed model with sloped geometry:**

Refer to project E1 – perforated steel lintel; Number of Nodes = 69324; Φ = 8.038 W;

Linear thermal transmittance (Ψ) = 0.193 W/mK

$$\Psi = \frac{\Phi}{(Ti - Te)} - U1 \times A1 = \frac{7.99}{(20 - 0)} - 0.153 \times 1.35 = 0.193 \text{ (W/mK)}$$

Temperature factor ($f_{R_{si}}$)= 0.931

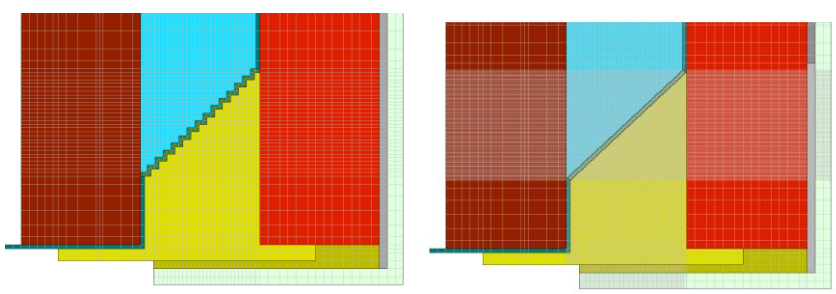

**Figure 13: Comparing analysis grid mesh for approximated model with rectangular elements (7698 nodes) vs. detailed model with sloped geometry (69324 nodes)**

## 4. E2 – Lintel (any other, excluding steel lintel with perforated steel)

E2_CONCRETE_LINTEL.trc

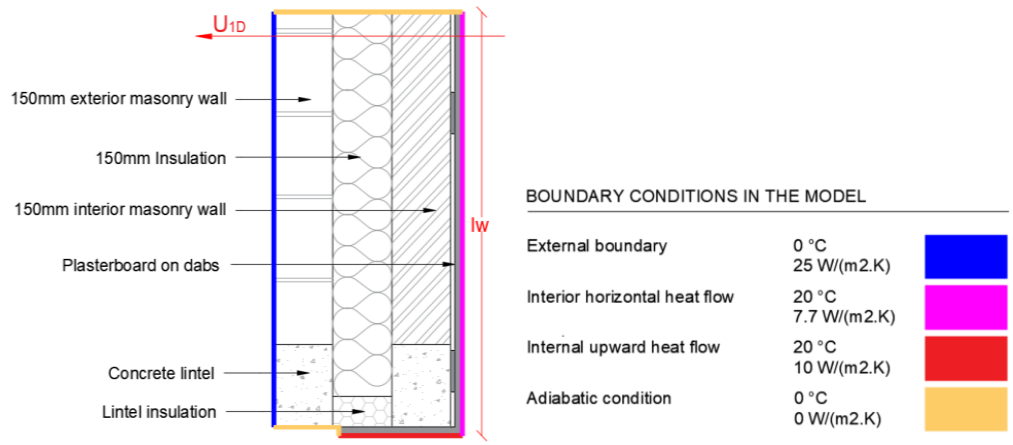


**Figure 14: Concrete lintel – Junction E2**

### Step 1: Identify junction type

- E2 - Independent concrete lintels

### Step 2: Refer to appropriate conventions within BR497

- 4.3.1 Lintel (window head)
- 2.5 Boundary conditions

### Step 3: Prepare geometry in DXF format: E2_CONCRETE_LINTEL.dxf

See section 2.1 in this document.

### Step 4: Define material properties and boundary conditions

- Boundary conditions and surface heat transfer coefficients defined as per section 2.5 of BR497.

Colours

| Col. | | Type | Subtype | Physical flow dir. | Geometrical flow dir. | Name | ε1 / ε2 [- / -] | λ [W/mK] | ε [-] | θ [°C] | h [W/m²K] | q [W/m²] | θa [°C] | hc [W/m²K] | Pc [W] | θr [°C] | Standard |
|---|---|---|---|---|---|---|---|---|---|---|---|---|---|---|---|---|---|
| 120 | | MATERIAL | | | | concrete density 2400 kg/m3 | | 2.000 | | | | | | | | | |
| 132 | | MATERIAL | | | | masonry light | | 0.220 | | | | | | | | | |
| 133 | | MATERIAL | | | | insulation 0.030 W/mK | | 0.030 | | | | | | | | | |
| 148 | | MATERIAL | | | | masonry medium density | | 0.320 | | | | | | | | | |
| 151 | | MATERIAL | | | | insulation 0.035 W/mK | | 0.035 | | | | | | | | | |
| 161 | | MATERIAL | | | | gypsum plasterboard | | 0.250 | | | | | | | | | |
| 170 | | BC_SIMPL | HE | | | exterior | | | | 0.0 | 25.00 | 0 | | | | | EN6946 |
| 174 | | BC_SIMPL | HI | HOR | | interior (normal) horizontal heat flow | | | | 20.0 | 7.70 | 0 | | | | | EN6946 |
| 190 | | BC_SIMPL | HI | UP | | indoors; upwards heat flow | | | | 20.0 | 10.00 | 0 | | | | | EN6946 |
| 191 | | BC_SIMPL | NIHIL | | | adiabatic | | | | 0.0 | 0.00 | 0 | | | | | NIHIL |
| 240 | | EQUIMAT | LAYER | HOR | X | | 0.90 / 0.90 | 0.071 | | | | | | | | | EN6946 |

**Figure 15: Materials and boundary condition properties for analysis**

### Step 5: Define the 1D U-value and areas of flanking elements

- The areas of flanking elements are the internal dimensions *(as per 2.2.2 of BR497)*
  *Edit → Areas.*

- 1D U-values are defined at the edges of flanking element.
  *Edit → U Values.*

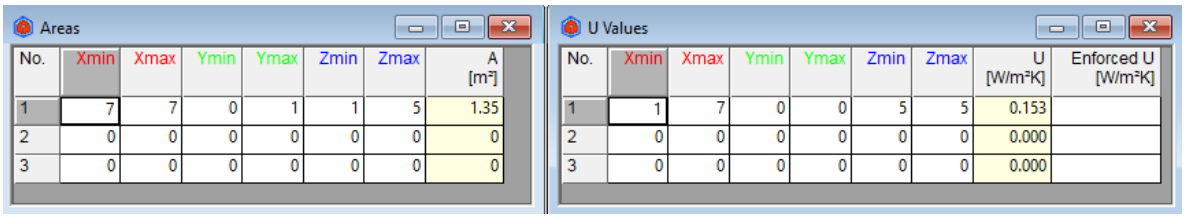

Areas

| No. | Xmin | Xmax | Ymin | Ymax | Zmin | Zmax | A [m²] |
|---|---|---|---|---|---|---|---|
| 1 | 7 | 7 | 0 | 1 | 1 | 5 | 1.35 |
| 2 | 0 | 0 | 0 | 0 | 0 | 0 | 0 |
| 3 | 0 | 0 | 0 | 0 | 0 | 0 | 0 |

U Values

| No. | Xmin | Xmax | Ymin | Ymax | Zmin | Zmax | U [W/m²K] | Enforced U [W/m²K] |
|---|---|---|---|---|---|---|---|---|
| 1 | 1 | 7 | 0 | 0 | 5 | 5 | 0.153 | |
| 2 | 0 | 0 | 0 | 0 | 0 | 0 | 0.000 | |
| 3 | 0 | 0 | 0 | 0 | 0 | 0 | 0.000 | |

**Figure 16: Areas and 1D U-values of flanking element for analysis**

**Step 6: Define derived thermal properties and run the calculation**

- Choose the output required to calculate from the analysis (Ψ-value / temperature factor ($f_{Rsi}$)).
  *Edit → Derived Thermal Properties…*
- Prepare the grid for analysis using 'Auto split' and then run the calculation.
  *Grid → Auto split…* (see section 2.2 for parameters)

**Note, as per BR497:**

- The lintel detail can be modelled without a window frame. The intersection of the frame and lintel is taken as an adiabatic boundary using colour 191 in the Colour Database.
- The length of the flanking element is either 1000mm or 3 times thickness of wall; whichever is greater.
- The indoor boundary conditions are defined with two colour types: indoor horizontal (174) and indoor upward heat flow (190), see Figure 14.

**Calculated Result from the analysis:**

Linear thermal transmittance (Ψ) = 0.042 W/mK

$$\Psi = \frac{\phi}{(Ti - Te)} - U1 \times A1 = \frac{4.977}{(20 - 0)} - 0.153 \times 1.35 = 0.042 \text{ W/mK}$$

Temperature factor ($f_{R_{si}}$)= 0.908 (Check section 2.5 for critical temperature factors $f_c$)

**Default Ψ (as per SAP version 10.2)**

Any other lintel (excluding steel lintel with perforated steel) = 1.00 W/mK

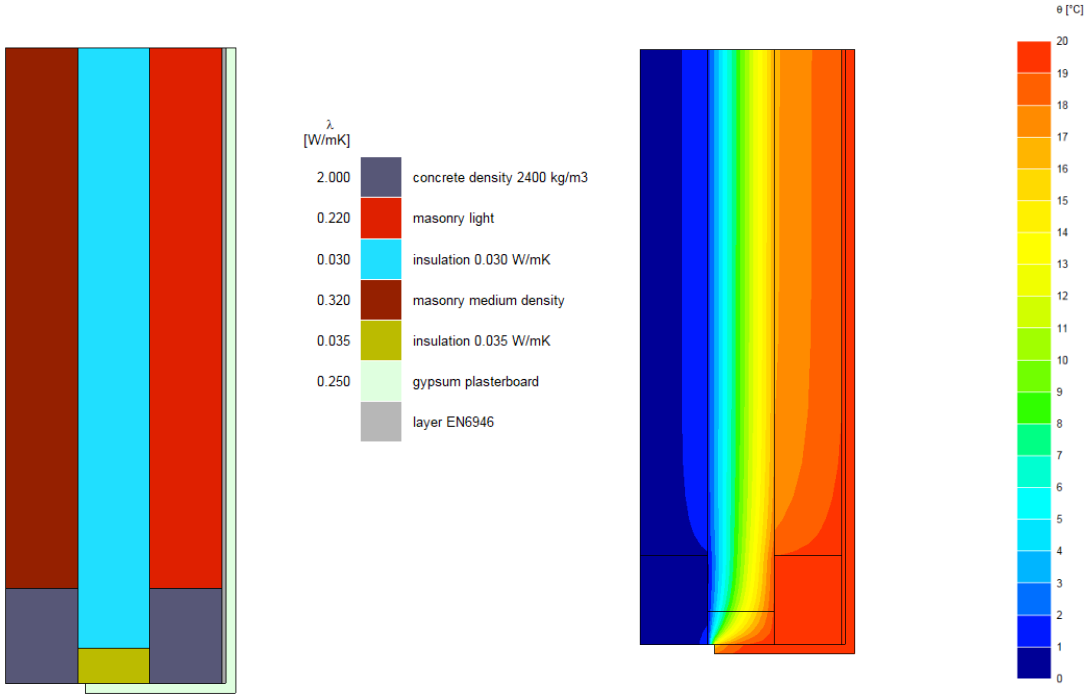


**Figure 17: Material properties and Isotherms**

## 5. E3 – Window sill

E3_WINDOW_SILL.trc

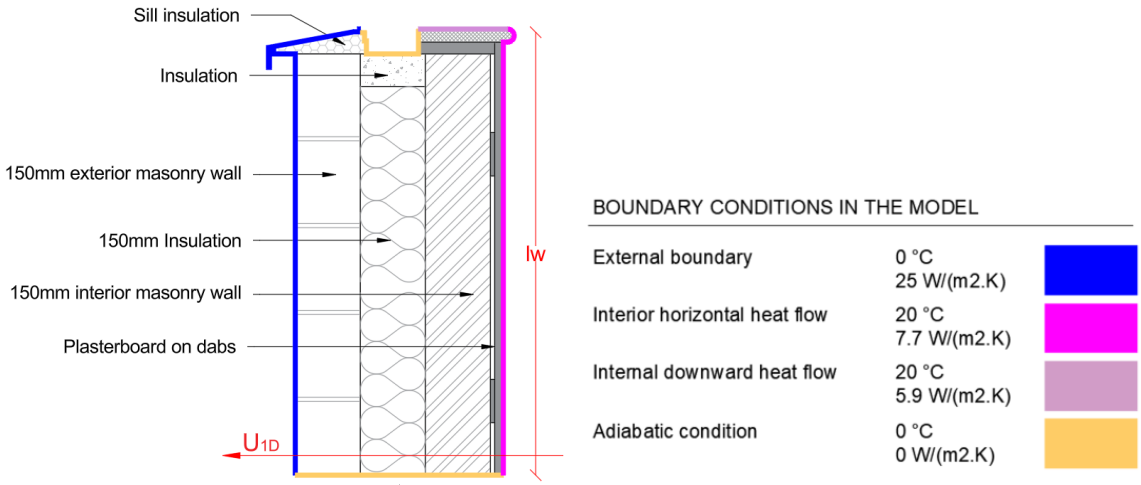


**Figure 18: Window Sill – Junction E3**

### Step 1: Identify junction type

- E3 – Window sill

### Step 2: Refer to the appropriate conventions within BR497

- 4.3.3 Sill
- 2.5 Boundary conditions

### Step 3: Prepare geometry in DXF format: E3_WINDOW_SILL.dxf

See section 2.1 in this document.

### Step 4: Define material properties and boundary conditions

- Boundary conditions and surface heat transfer coefficients defined as per section 2.5 of BR497.

Colours

| Col. | | Type | Subtype | Physical flow dir. | Geometrical flow dir. | Name | ε1 / ε2 [- / -] | λ [W/mK] | ε [-] | θ [°C] | h [W/m²K] | q [W/m²] | θa [°C] | hc [W/m²K] | Pc [W] | θr [°C] | Standard |
|---|---|---|---|---|---|---|---|---|---|---|---|---|---|---|---|---|---|
| 8 | | MATERIAL | | | | aluminium | | 160.000 | | | | | | | | | |
| 120 | | MATERIAL | | | | concrete density 2400 kg/m3 | | 2.000 | | | | | | | | | |
| 131 | | MATERIAL | | | | insulation 0.040 W/mK | | 0.040 | | | | | | | | | |
| 132 | | MATERIAL | | | | masonry light | | 0.220 | | | | | | | | | |
| 133 | | MATERIAL | | | | insulation 0.030 W/mK | | 0.030 | | | | | | | | | |
| 148 | | MATERIAL | | | | masonry medium density | | 0.320 | | | | | | | | | |
| 151 | | MATERIAL | | | | insulation 0.035 W/mK | | 0.035 | | | | | | | | | |
| 161 | | MATERIAL | | | | gypsum plasterboard | | 0.250 | | | | | | | | | |
| 166 | | BC_SIMPL | HI | DOWN | | indoors downwards heat flow | | | | 20.0 | 5.90 | 0 | | | | | EN6946 |
| 170 | | BC_SIMPL | HE | | | exterior | | | | 0.0 | 25.00 | 0 | | | | | EN6946 |
| 174 | | BC_SIMPL | HI | HOR | | interior (normal) horizontal heat flow | | | | 20.0 | 7.70 | 0 | | | | | EN6946 |
| 191 | | BC_SIMPL | NIHIL | | | adiabatic | | | | 0.0 | 0.00 | 0 | | | | | NIHIL |
| 240 | | EQUIMAT | LAYER | HOR | X | | 0.90 / 0.90 | 0.067 | | | | | | | | | EN6946 |

**Figure 19: Materials and boundary condition properties for analysis**

**Step 5: Define the 1D U-value and areas of flanking elements**

- The areas of flanking elements are the internal dimensions (as per 2.2.2 of BR497).
  *Edit → Areas.*
- 1D U-values are defined at the edges of flanking elements.
  *Edit → U Values.*

Areas

| No. | Xmin | Xmax | Ymin | Ymax | Zmin | Zmax | A [m²] |
|---|---|---|---|---|---|---|---|
| 1 | 53 | 53 | 0 | 1 | 0 | 47 | 1.35 |
| 2 | 0 | 0 | 0 | 0 | 0 | 0 | 0 |
| 3 | 0 | 0 | 0 | 0 | 0 | 0 | 0 |

U Values

| No. | Xmin | Xmax | Ymin | Ymax | Zmin | Zmax | U [W/m²K] | Enforced U [W/m²K] |
|---|---|---|---|---|---|---|---|---|
| 1 | 1 | 66 | 0 | 0 | 0 | 0 | 0.153 | |
| 2 | 0 | 0 | 0 | 0 | 0 | 0 | 0.000 | |
| 3 | 0 | 0 | 0 | 0 | 0 | 0 | 0.000 | |

**Figure 20: Areas and 1D U-values of flanking element for analysis**

**Step 6: Define derived thermal properties and run the calculation**

- Choose the output required to calculate from the analysis (Ψ-value / temperature factor (fRsi)).
  *Edit → Derived Thermal Properties…*
- Prepare the grid for analysis using 'Auto split' and then run the calculation.
  *Grid → Auto split…* (see section 2.2 for parameters)

**Note, as per BR497**

- Sill detail can be modelled without the window frame. The intersection of the frame and the sill is taken as an adiabatic boundary using colour 191 in the Physibel Colour Database.
- The length of the flanking element is either 1000mm or 3 times the thickness of wall; whichever is greater.
- The indoor boundary conditions are defined with two colour types: indoor horizontal (174) and indoor downward heat flow (166) (see Figure 18).

**Calculated Result from the analysis:**

Linear thermal transmittance (Ψ) = -0.004 W/mK

$$\Psi = \frac{\phi}{(Ti - Te)} - U1 \times A1 = \frac{4.057}{(20 - 0)} - 0.153 \times 1.35 = -0.004\ W/mK$$

Temperature factor ($f_{R_{si}}$)= 0.980 (Check section 2.5 for critical temperature factors $f_c$)

**Default Ψ (as per SAP version 10.2)**

Sill = 0.1 W/mK

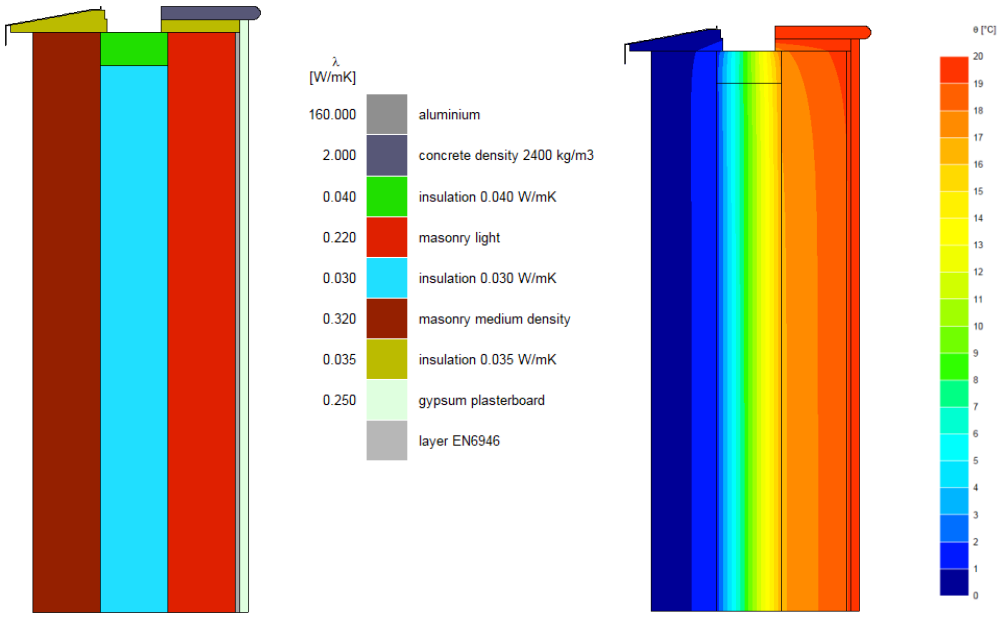


**Figure 21: Material properties and Isotherms**

## 6. E4 – Window jamb

E4_Window_Jamb.tr

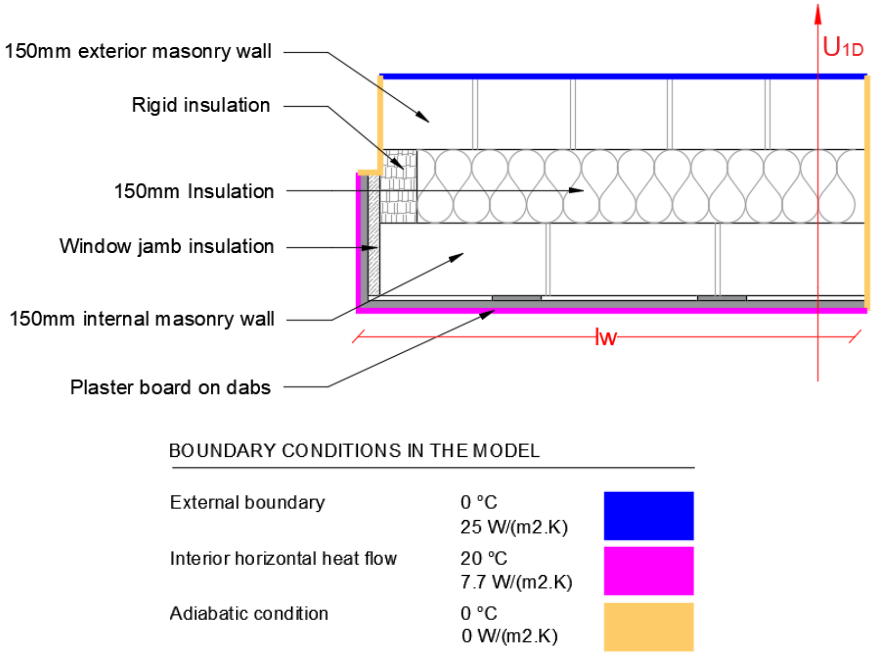


**Figure 22: Materials and boundary conditions of window jamb (E4)**

### Step 1: Identify junction type

- E4 - Jamb

### Step 2: Refer to the appropriate conventions within BR497

- 4.3.2 Jamb
- 2.5 Boundary conditions
- 2.2.2 Areas of Flanking elements

### Step 3: Prepare geometry in DXF format: E4_Window_Jamb.dxf

See section 2.1 in this document.

> Note: In section 2.1, the XZ orientation is recommended, as this is the most suitable choice for the majority of the examples in this document, which are vertical sections. The present example, however, is a horizontal section. Therefore, using the XY orientation makes manipulating and rotating the model in TRISCO more intuitive. This choice is purely for convenience and has no impact on the calculation results.

### Step 4: Define material properties and boundary conditions

- Boundary conditions and surface heat transfer coefficients are defined as per section 2.5 of BR497.

Colours

| Col. | | Type | Subtype | Physical flow dir. | Geometrical flow dir. | Name | ε1 / ε2 [- / -] | λ [W/mK] | ε [-] | θ [°C] | h [W/m²K] | q [W/m²] | θa [°C] | hc [W/m²K] | Pc [W] | θr [°C] | Standard |
|---|---|---|---|---|---|---|---|---|---|---|---|---|---|---|---|---|---|
| 120 | | MATERIAL | | | | concrete density 2400 kg/m3 | | 2.000 | | | | | | | | | |
| 131 | | MATERIAL | | | | insulation 0.040 W/mK | | 0.040 | | | | | | | | | |
| 133 | | MATERIAL | | | | insulation 0.030 W/mK | | 0.030 | | | | | | | | | |
| 148 | | MATERIAL | | | | masonry medium density | | 0.320 | | | | | | | | | |
| 151 | | MATERIAL | | | | insulation 0.035 W/mK | | 0.035 | | | | | | | | | |
| 161 | | MATERIAL | | | | gypsum plasterboard | | 0.250 | | | | | | | | | |
| 170 | | BC_SIMPL | HE | | | exterior | | | | 0.0 | 25.00 | 0 | | | | | EN6946 |
| 174 | | BC_SIMPL | HI | HOR | | interior (normal) horizontal heat flow | | | | 20.0 | 7.70 | 0 | | | | | EN6946 |
| 191 | | BC_SIMPL | NIHIL | | | adiabatic | | | | 0.0 | 0.00 | 0 | | | | | NIHIL |
| 240 | | EQUIMAT | LAYER | HOR | Y | | 0.90 / 0.90 | 0.067 | | | | | | | | | EN6946 |

**Figure 23: Materials and boundary condition properties for analysis**

### Step 5: Define the 1D U-value and areas of flanking elements

- The areas of flanking elements are the internal dimensions (as per 2.2.2 of BR497).
  *Edit → Areas.*
- 1D U-values are defined along the edges of flanking elements.
  *Edit → U Values.*

Areas

| No. | Xmin | Xmax | Ymin | Ymax | Zmin | Zmax | A [m²] |
|---|---|---|---|---|---|---|---|
| 1 | 1 | 5 | 1 | 1 | 0 | 1 | 1.44 |
| 2 | 0 | 0 | 0 | 0 | 0 | 0 | 0 |
| 3 | 0 | 0 | 0 | 0 | 0 | 0 | 0 |

U Values

| No. | Xmin | Xmax | Ymin | Ymax | Zmin | Zmax | U [W/m²K] | Enforced U [W/m²K] |
|---|---|---|---|---|---|---|---|---|
| 1 | 5 | 5 | 1 | 7 | 0 | 0 | 0.169 | |
| 2 | 0 | 0 | 0 | 0 | 0 | 0 | 0.000 | |
| 3 | 0 | 0 | 0 | 0 | 0 | 0 | 0.000 | |

**Figure 24: Areas and 1D U-values of flanking element for analysis**

### Step 6: Define derived thermal properties and run the calculation

- Choose the output required to calculate from the analysis (Ψ-value / temperature factor (fRsi)).
  *Edit → Derived Thermal Properties…*
- Prepare the grid for analysis using 'Auto split' and then run the calculation.
  *Grid → Auto split…* (see section 2.2 for parameters)

### Note, as per BR497:

- Jamb detail can be modelled without the window frame. The intersection of the frame and wall is taken as adiabatic by overriding with the colour 191.
- The length of the flanking element is either 1000mm or 3 times the thickness of wall; whichever is greater.

### Calculated Result from the analysis:

Linear thermal transmittance (Ψ) = 0.003 W/mK

$$\Psi = \frac{\phi}{(Ti - Te)} - U1 \times A1 = \frac{5.023}{(20 - 0)} - 0.169 \times 1.44 = 0.003\ W/mK$$

Temperature factor ($f_{R_{si}}$)= 0.969 (Check section 2.5 for critical temperature factors $f_c$)

### Default Ψ (as per SAP version 10.2)

Jamb = 0.1 W/mK

**Figure 25: Material properties**

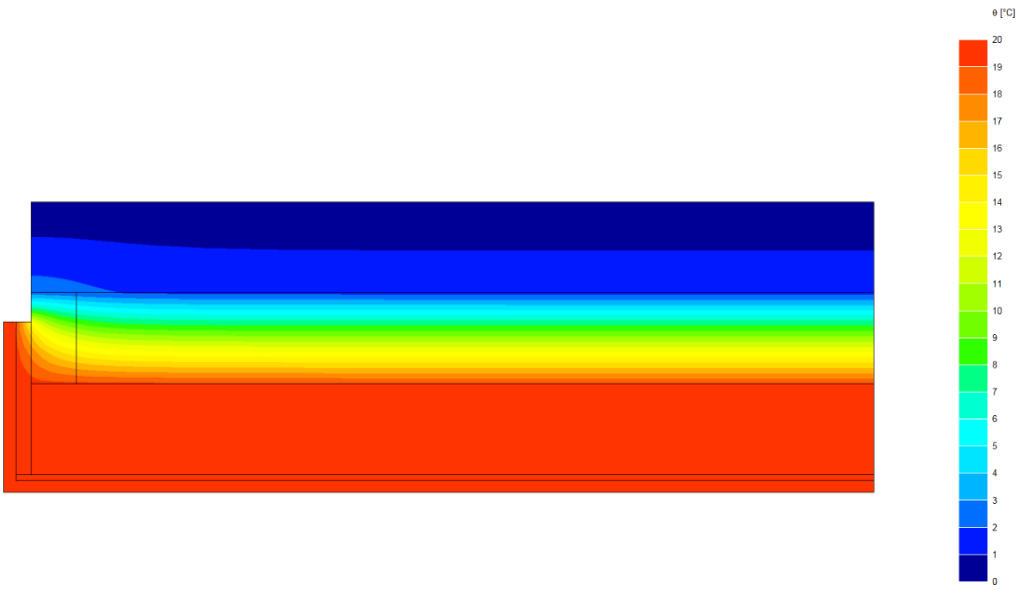


**Figure 26: Isotherms**

## 7. E5a – Ground floor (slab on the ground)

E5A_Slab_on_Ground.trc

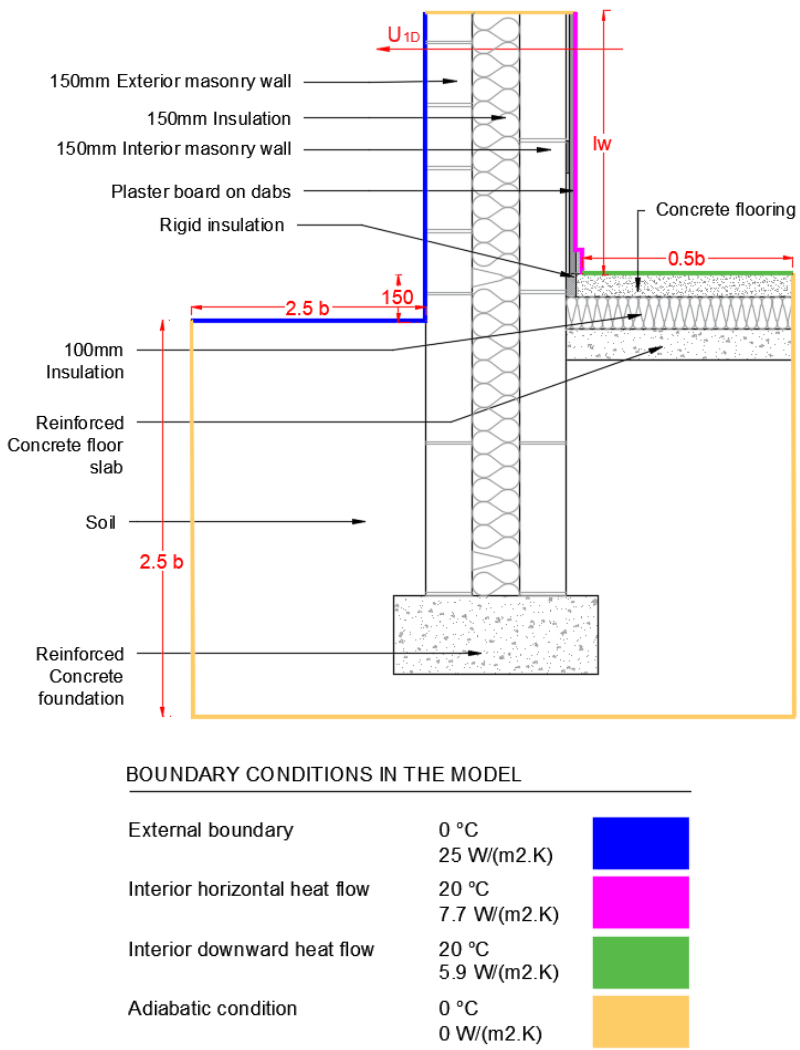


**Figure 27: Materials and boundary conditions of slab on ground (E5a)**

**Step 1: Identify junction type**

- E5 – Ground floor (Normal)

**Step 2: Refer to the appropriate conventions within BR497**

- 4.7.1 Solid ground floor
- 2.5 Boundary conditions
- 2.2.2 Areas of Flanking elements

**Step 3: Prepare geometry in DXF format:** E5A_Slab_on_Ground.dxf

See section 2.1 in this document.

Note: For ground-floor junctions, the floor is modelled as 0.5b, while the ground is modelled up to 2.5b horizontally from the wall and 2.5b vertically from ground level. This approach follows EN ISO

10211 standards. However, according to BR497 b should be fixed to 8 m. The modelling dimensions are illustrated in Figure 27.

However, creating such a large model in a DXF environment can result in missing critical details in the floor and wall representation. To capture all details accurately, pixel resolution must be reduced, which significantly increases computational load. Therefore, it is recommended to initially model the ground-floor junction using 0.5b dimensions and then extend the model in TRISCO to achieve the required 2.5b dimensions. For this example the recommended pixel resolution in TriscoDXF is 1.

Figure 28 shows the initial model with 0.5b. To obtain an accurate model, the first grid dimensions are increased by 16 000 mm, corresponding to 2b. The final result is presented in Figure 29.

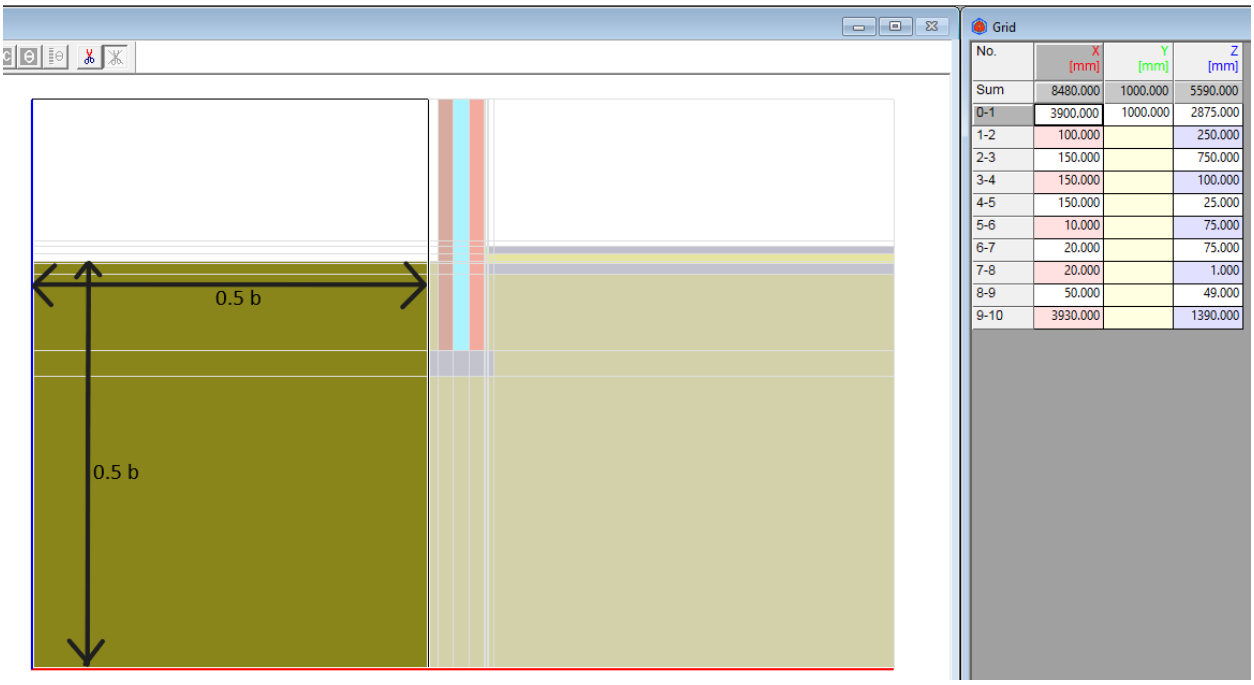


| No. | X [mm] | Y [mm] | Z [mm] |
|---|---|---|---|
| Sum | 8480.000 | 1000.000 | 5590.000 |
| 0-1 | 3900.000 | 1000.000 | 2875.000 |
| 1-2 | 100.000 | | 250.000 |
| 2-3 | 150.000 | | 750.000 |
| 3-4 | 150.000 | | 100.000 |
| 4-5 | 150.000 | | 25.000 |
| 5-6 | 10.000 | | 75.000 |
| 6-7 | 20.000 | | 75.000 |
| 7-8 | 20.000 | | 1.000 |
| 8-9 | 50.000 | | 49.000 |
| 9-10 | 3930.000 | | 1390.000 |

**Figure 28 DXF dimensions of the model**

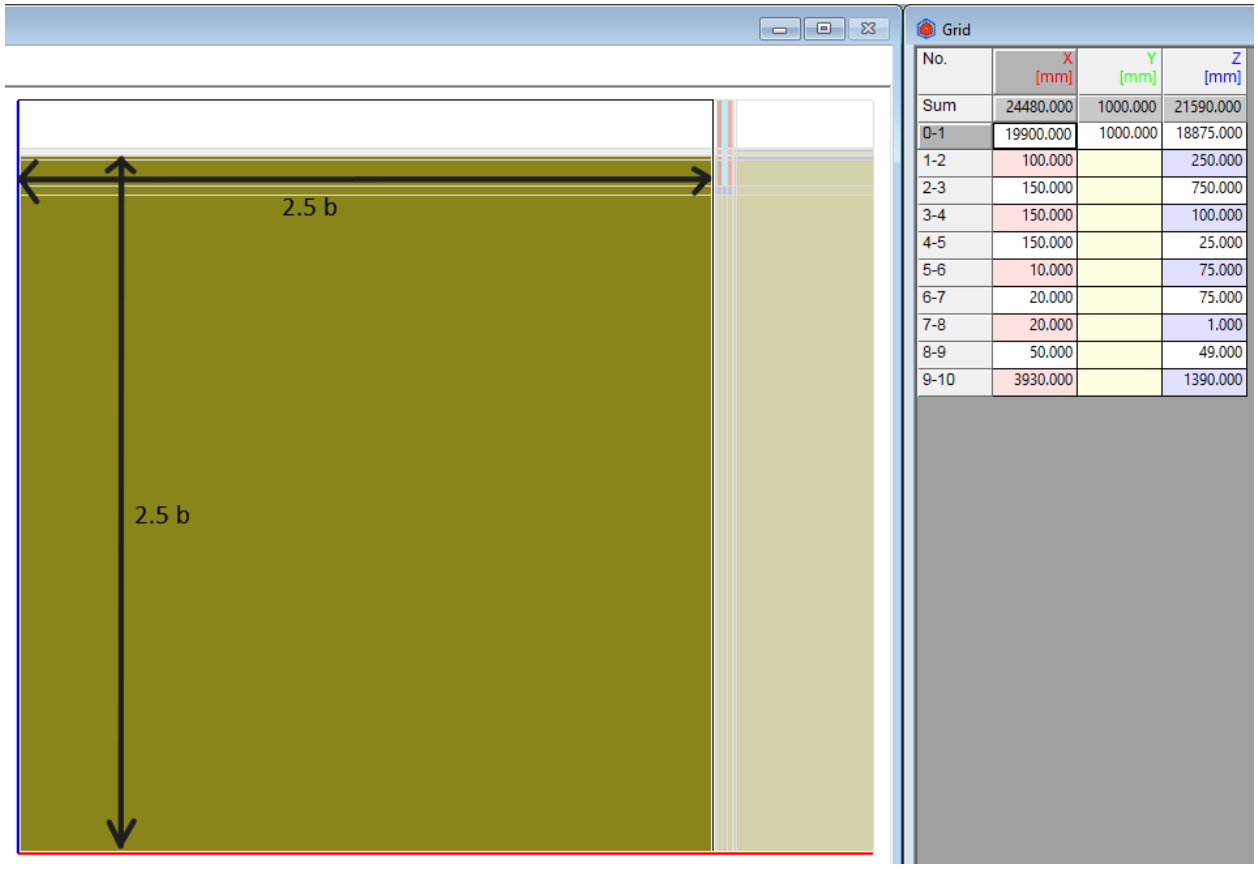


| No. | X [mm] | Y [mm] | Z [mm] |
|---|---|---|---|
| Sum | 24480.000 | 1000.000 | 21590.000 |
| 0-1 | 19900.000 | 1000.000 | 18875.000 |
| 1-2 | 100.000 | | 250.000 |
| 2-3 | 150.000 | | 750.000 |
| 3-4 | 150.000 | | 100.000 |
| 4-5 | 150.000 | | 25.000 |
| 5-6 | 10.000 | | 75.000 |
| 6-7 | 20.000 | | 75.000 |
| 7-8 | 20.000 | | 1.000 |
| 8-9 | 50.000 | | 49.000 |
| 9-10 | 3930.000 | | 1390.000 |

**Figure 29 The extended dimensions of the model for calculation**

## Step 4: Define material properties and boundary conditions

- For boundary conditions and surface heat transfer coefficients (as per section 2.5 of BR497)

Colours

| Col. | | Type | Subtype | Physical flow dir. | Geometrical flow dir. | Name | ε1 / ε2 [- / -] | λ [W/mK] | ε [-] | θ [°C] | h [W/m²K] | q [W/m²] | θa [°C] | hc [W/m²K] | Pc [W] | θr [°C] | Standard |
|---|---|---|---|---|---|---|---|---|---|---|---|---|---|---|---|---|---|
| 31 | | MATERIAL | | | | clay or silt | | 1.500 | | | | | | | | | |
| 71 | | MATERIAL | | | | fibreboard incl. MDF(e) 250 kg/m3 | | 0.070 | | | | | | | | | |
| 120 | | MATERIAL | | | | concrete density 2400 kg/m3 | | 2.000 | | | | | | | | | |
| 131 | | MATERIAL | | | | insulation 0.040 W/mK | | 0.040 | | | | | | | | | |
| 132 | | MATERIAL | | | | masonry light | | 0.220 | | | | | | | | | |
| 133 | | MATERIAL | | | | insulation 0.030 W/mK | | 0.030 | | | | | | | | | |
| 136 | | MATERIAL | | | | reinforced concrete (steel 2%) | | 2.500 | | | | | | | | | |
| 148 | | MATERIAL | | | | masonry medium density | | 0.320 | | | | | | | | | |
| 151 | | MATERIAL | | | | insulation 0.035 W/mK | | 0.035 | | | | | | | | | |
| 161 | | MATERIAL | | | | gypsum plasterboard | | 0.250 | | | | | | | | | |
| 166 | | BC_SIMPL | HI | DOWN | | indoors downwards heat flow | | | | 20.0 | 5.90 | 0 | | | | | EN6946 |
| 170 | | BC_SIMPL | HE | | | exterior | | | | 0.0 | 25.00 | 0 | | | | | EN6946 |
| 174 | | BC_SIMPL | HI | HOR | | interior (normal) horizontal heat flow | | | | 20.0 | 7.70 | 0 | | | | | EN6946 |
| 240 | | EQUIMAT | LAYER | HOR | X | | 0.90 / 0.90 | 0.067 | | | | | | | | | EN6946 |

**Figure 30: Materials and boundary condition properties for analysis**

## Step 5: Define the 1D U-values and areas of flanking elements

- The areas of flanking elements are the internal dimensions (as per 2.2.2 of BR497). *Edit → Areas.*
- 1D U-values are normally defined at the edges of flanking elements. In case of a slab on ground detail, the U-value of the floor is not 1D. The equivalent U-value of the floor, including the ground resistance must be calculated as per EN ISO 13370

(Ground_Floor_Junction_Calculator.xlsx). This value can be enforced in the U-value window (see Figure 31).
*Edit → U Values.*

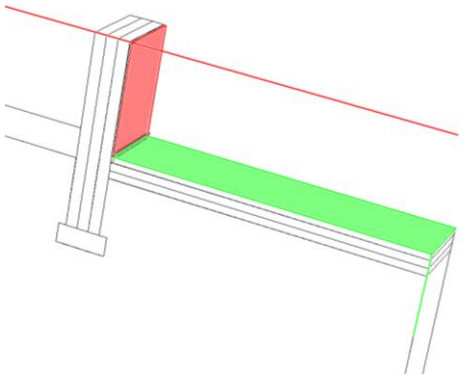

Areas

| No. | Xmin | Xmax | Ymin | Ymax | Zmin | Zmax | A [m²] |
|---|---|---|---|---|---|---|---|
| 1 | 7 | 7 | 0 | 1 | 7 | 10 | 1.44 |
| 2 | 7 | 10 | 0 | 1 | 7 | 7 | 4 |
| 3 | 0 | 0 | 0 | 0 | 0 | 0 | 0 |

U Values

| No. | Xmin | Xmax | Ymin | Ymax | Zmin | Zmax | U [W/m²K] | Enforced U [W/m²K] |
|---|---|---|---|---|---|---|---|---|
| 1 | 0 | 74 | 0 | 0 | 83 | 83 | 0.153 | |
| 2 | 74 | 74 | 0 | 0 | 27 | 67 | 0.000 | 0.175 |
| 3 | 0 | 0 | 0 | 0 | 0 | 0 | 0.000 | |

**Figure 31: 1D U-Values defined in TRISCO**

**Step 6: Define derived thermal properties and run the calculation**

- Choose the output required to calculate from the analysis (Ψ-value / temperature factor (fRsi)).
  *Edit → Derived Thermal Properties…*
- Prepare the grid for analysis using 'Auto split' and then run the calculation.
  *Grid → Auto split…* (see section 2.2 for parameters)

**Note, as per BR497:**

- The length of the flanking element (wall) is 1000mm or 3 times the thickness of the wall, whichever is greater.
- The level of the external soil (in the model) should be set 150 mm below that of the internal floor finish.
- The characteristic dimensions of the floor (b) in the model should be set to 8 m, which corresponds to a P/A of 0.25 (section 2.2.2 of BR497). P/A are defined in EN ISO 13370.
- The example mentioned above is a 2D case, where the floor width is b/2 and soil depth for analysis should be taken as 2.5 x b.
- In case of 3D heat transfer (3D corner of wall-wall-ground), to calculate temperature at the corner of the floor slab, refer to the section 7.1 .
- The U-value of the floor must also include the resistance offered by the soil below. This shall be calculated as per EN ISO 13370 (Formula 4) or the BRE U-value calculator. Alternatively, you can also use the attached spreadsheet Ground_Floor_Junction_Calculator.xlsx.

**Calculated Result from the analysis:**

Linear thermal transmittance (Ψ) = -0.003 W/mK

$$\Psi = \left(\frac{\phi}{(Ti - Te)}\right) - U1 \times A1 - U2 \times A2 = \frac{18.340}{20-0} - 0.153 \times 1.44 - 0.175 \times 4 = -0.003\ W/mK$$

Temperature factor ($f_{R_{si}}$)= 0.941 (Check section 2.5 for critical temperature factors $f_c$)

**Default Ψ (as per SAP version 10.2):**

Ground floor (normal) (E5) = 0.32 W/mK

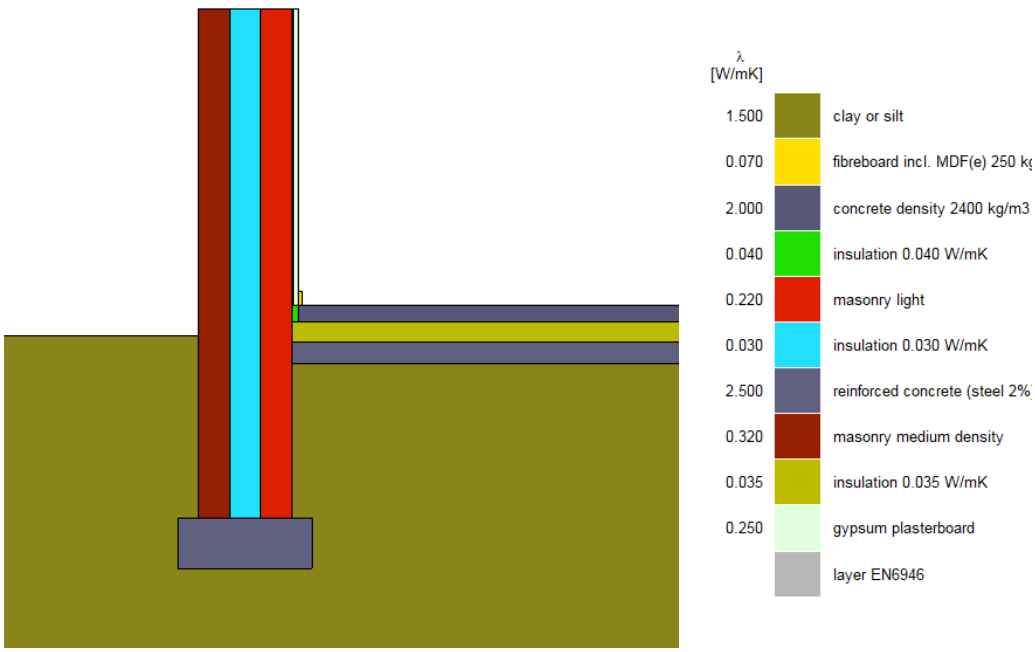


**Figure 32: Material properties**

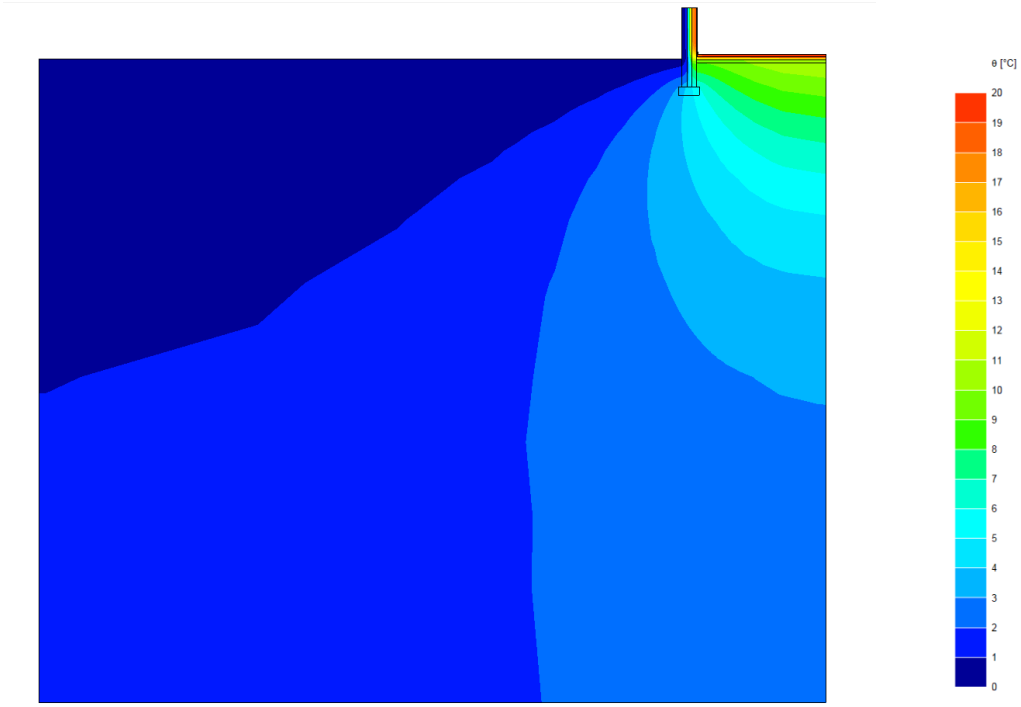


**Figure 33: Temperature contour from the analysis**

### 7.1. Annex A: Temperature factor for 3D corner (wall-wall-slab on ground detail)

E5A_Slab_on_Ground_3D.trc

BR497 requires that the temperature factor (fRsi) for ground junctions be calculated using 3D modelling. This section illustrates the procedure with an example from the previous paragraph.

**Step 1: Modelling 3D corner in TRISCO**

- We shall continue from the previous example of the 2D corner (wall-ground junction) to create a 3D Junction. Firstly, we extend the floor in the orthogonal direction to 4 meters (which is 0.5×B) by changing the Y 0-1 grid mesh from 1 meter to 4 meters.

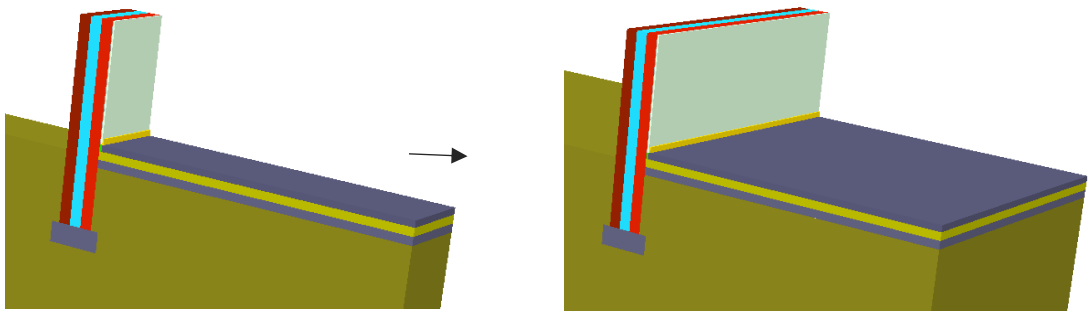

**Figure 34: Extruding the Y plane from 1m to 4m**

- Then, select all blocks, under the blocks menu choose 'Revolve 90°' and select the axis of revolution along with its position.
  *Blocks → Revolve 90°…*

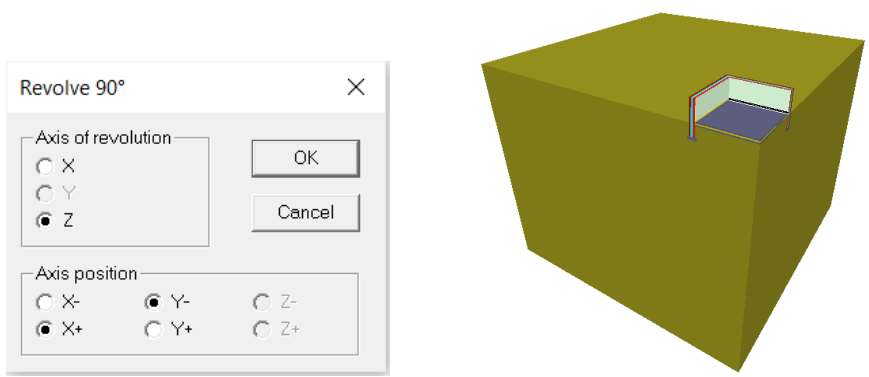


**Figure 35: Modelling 3D corner junction using revolve**

**Step 2: Create analysis temperature nodes (by using Nodes BCs)**

- As per BR497, we will derive the temperature factor from the node temperatures at 1cm from the corner (see Figure 39). We will use Nodes BCs to output these temperatures. First, grid coordinates are created in X, Y and Z at 1cm from the corner.

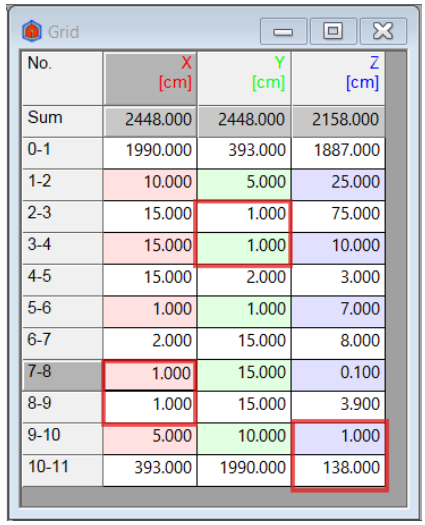

Grid

| No. | X [cm] | Y [cm] | Z [cm] |
|---|---|---|---|
| Sum | 2448.000 | 2448.000 | 2158.000 |
| 0-1 | 1990.000 | 393.000 | 1887.000 |
| 1-2 | 10.000 | 5.000 | 25.000 |
| 2-3 | 15.000 | 1.000 | 75.000 |
| 3-4 | 15.000 | 1.000 | 10.000 |
| 4-5 | 15.000 | 2.000 | 3.000 |
| 5-6 | 1.000 | 1.000 | 7.000 |
| 6-7 | 2.000 | 15.000 | 8.000 |
| 7-8 | 1.000 | 15.000 | 0.100 |
| 8-9 | 1.000 | 15.000 | 3.900 |
| 9-10 | 5.000 | 10.000 | 1.000 |
| 10-11 | 393.000 | 1990.000 | 138.000 |

**Figure 36: Splitting grids to incorporate analysis grid nodes**

- Then, Node BC's are defined (*Edit → NODE BCs*) . Choose "Insert after" creating a node parameter. Here we change the type to POWER with its value 0 W. In this way, we create a power source of 0 Watt. The temperatures of these Node BC will be available in the text output.
  *Edit → Node BC's*
- Input the coordinates X, Y, Z for all 3 nodes to analyze surface temperature.

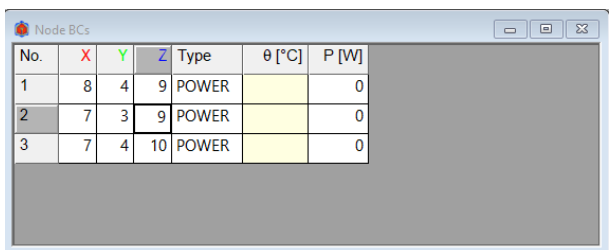

Node BCs

| No. | X | Y | Z | Type | θ [°C] | P [W] |
|---|---|---|---|---|---|---|
| 1 | 8 | 4 | 9 | POWER | | 0 |
| 2 | 7 | 3 | 9 | POWER | | 0 |
| 3 | 7 | 4 | 10 | POWER | | 0 |

**Figure 37: Analysis node parameters at Node BC's window**

### Step 3: Run the calculation

- Prepare the grid for analysis, using auto split from the grid menu. (see Section 2.2)
- Run the calculation and open the text output. Under the Node BC tab, note the lowest temperature among the 3 nodes defined.

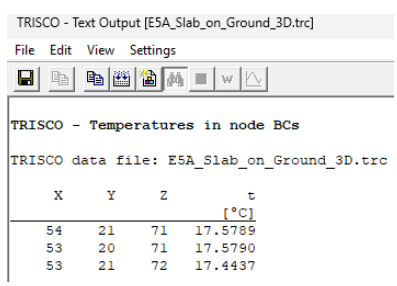

TRISCO - Text Output [E5A_Slab_on_Ground_3D.trc]

File Edit View Settings

```
TRISCO - Temperatures in node BCs

TRISCO data file: E5A_Slab_on_Ground_3D.trc

     X     Y     Z         t
                         [°C]
    54    21    71   17.5789
    53    20    71   17.5790
    53    21    72   17.4437
```

**Figure 38: Temperature at analysis nodes**

**Calculate the Temperature Factor ($f_{RSI}$)**

- The surface temperature (Tsi) is the minimum temperature of the 3 analyzed nodes which is noted in the previous step.
- Temperature factor (f RSI) is given by the equation:

$$f_{R_{SI}} = \frac{Tsi - Te}{Ti - Te} = (17.44 - 0)/(20 - 0) = f_{0.25} = 0.87\ (-)$$

  Where Tsi and Te are the indoor and external temperatures. The calculated $f_{Rsi}$ value is 0.87(-). Check section 2.5 for critical temperature factors $f'_c = g \ \ x \ \ f_c$.

**Note, as per BR497:**

- Check section 2.5 of this document for temperature factor and critical temperature factor explanations, formulas and value tables.
- Part 3.2, of BR497 explains the procedure to calculate the temperature factor ($f_{Rsi}$), which is used to assess the risk of surface condensation or mould growth on any detail.
- $f_{Rsi}$ is calculated at steady state conditions and depends only on the construction of the geometry but not on the air temperatures. Once $f_{Rsi}$ is calculated, we can use this value to calculate surface temperature in any other set of conditions using:
  Tsi = Te + $f_{Rsi}$ (Ti - Te)
- To avoid problems of surface condensation or mould growth $f_{Rsi}$ should not be lower than the critical temperature factor fc. BRE 497 refers to minimum values for fc for different internal environments (Information Paper IP 1/06).
- BR497 (refering to IP 1/06) sets a relaxation both in distance from the coldest point and critical temperature factor.

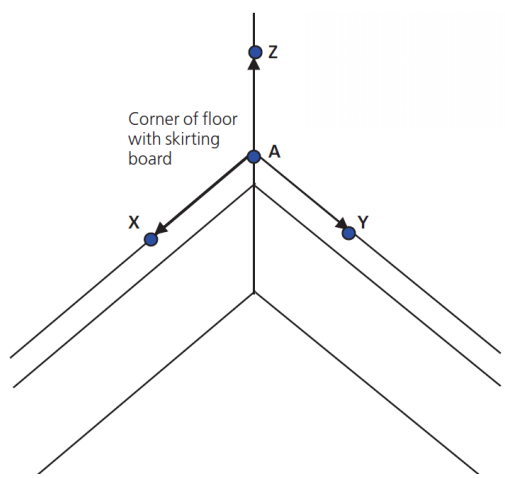


**Figure 39: Point A, coldest point which is at the corner above skirting. The other points X,Y and Z are 10mm away from point A**

- The reported corner temperature factor is obtained from the minimum of the three temperatures that are 10 mm away (in each of the three orthogonal axes, i.e X, Y, and Z in the model) from the coldest temperature in the corner, point A (which is the 3D corner at top of skirting).
- The characteristic dimensions of the floor (b) in both directions of the floor in the model should be set to 8 meters, which corresponds to a P/A of 0.25 (section 2.2.2, BR497).
- The example mentioned above is a 3D scenario, where the floor depth is b/2 and the soil depth for analysis should be taken as 2.5×b in both directions.

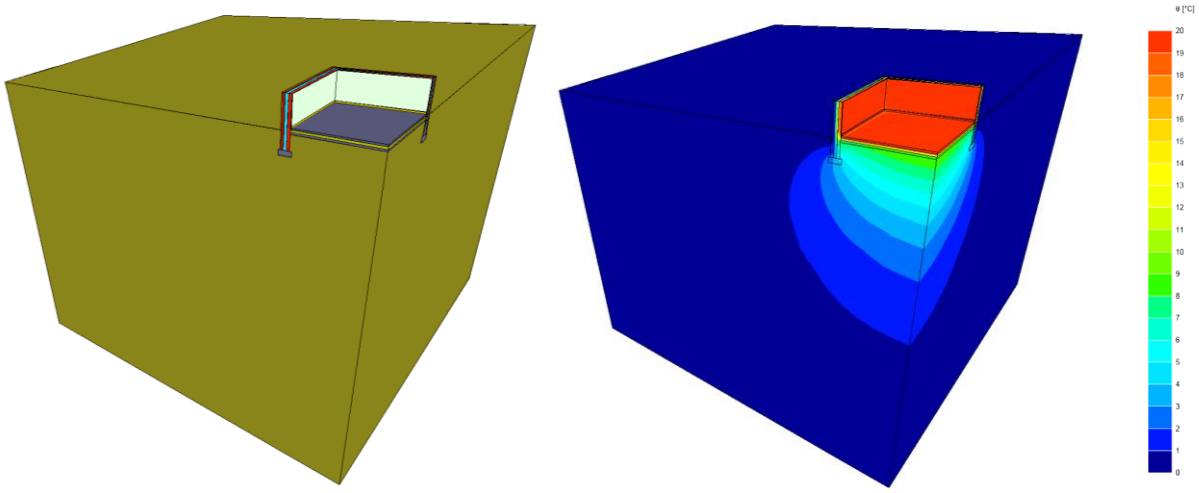


**Figure 40: Geometry and Isotherms**

## 8. E5b - Ground floor (suspended ground slab)

E5B_Suspended_Ground_floor.trc

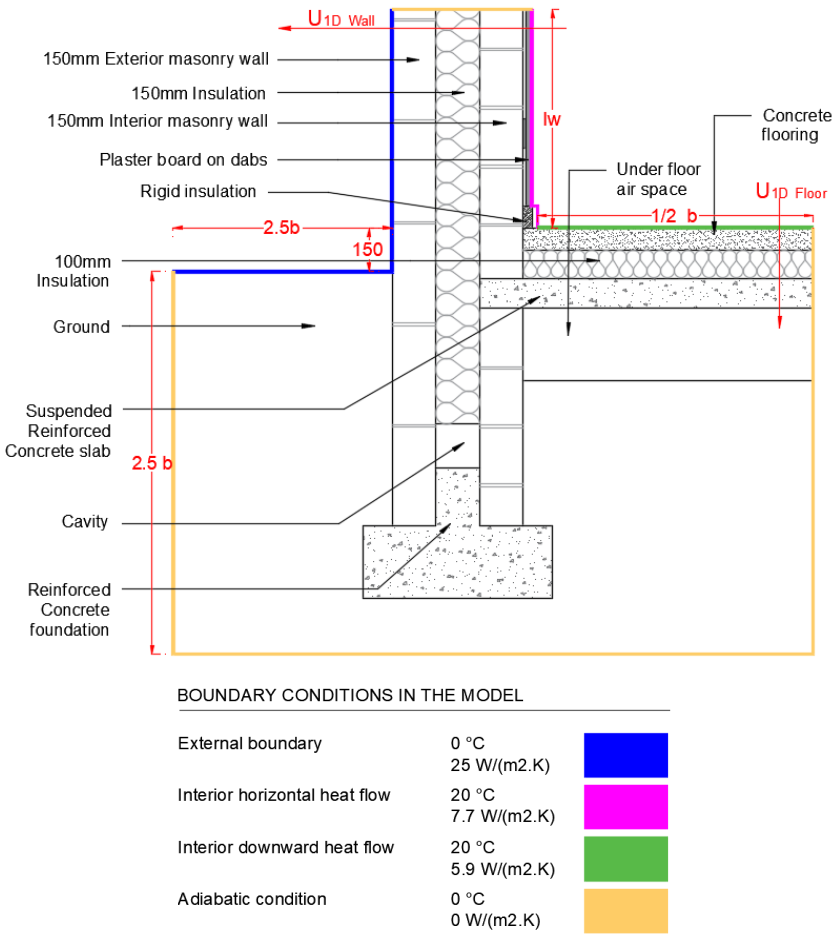


**Figure 41: Materials and boundary conditions of suspended ground slab (E5B)**

### Step 1: Identify junction type

- E5 – Ground floor (Normal)

### Step 2: Refer to appropriate conventions within BR497

- 4.7.2 Suspended ground floor
- 2.5 Boundary conditions
- 2.2.2 Areas of Flanking elements

### Step 3: Prepare geometry in DXF format: E5B_Suspended_Ground_floor.dxf

See section 2.1 in this document.

In this example the procedure explained in E5a is followed. (see section 7, step 3).

### Step 4: Define material properties and boundary conditions

- Boundary conditions and surface heat transfer coefficients are defined as per section 2.5 of BR497.

Colours

| Col. | | Type | Subtype | Physical flow dir. | Geometrical flow dir. | Name | ε1 / ε2 [- / -] | λ [W/mK] | ε [-] | θ [°C] | h [W/m²K] | q [W/m²] | θa [°C] | hc [W/m²K] | Pc [W] | θr [°C] | Standard |
|---|---|---|---|---|---|---|---|---|---|---|---|---|---|---|---|---|---|
| 31 | | MATERIAL | | | | clay or silt | | 1.500 | | | | | | | | | |
| 71 | | MATERIAL | | | | fibreboard incl. MDF(e) 250 kg/m3 | | 0.070 | | | | | | | | | |
| 120 | | MATERIAL | | | | concrete density 2400 kg/m3 | | 2.000 | | | | | | | | | |
| 131 | | MATERIAL | | | | insulation 0.040 W/mK | | 0.040 | | | | | | | | | |
| 132 | | MATERIAL | | | | masonry light | | 0.220 | | | | | | | | | |
| 133 | | MATERIAL | | | | insulation 0.030 W/mK | | 0.030 | | | | | | | | | |
| 136 | | MATERIAL | | | | reinforced concrete (steel 2%) | | 2.500 | | | | | | | | | |
| 148 | | MATERIAL | | | | masonry medium density | | 0.320 | | | | | | | | | |
| 151 | | MATERIAL | | | | insulation 0.035 W/mK | | 0.035 | | | | | | | | | |
| 161 | | MATERIAL | | | | gypsum plasterboard | | 0.250 | | | | | | | | | |
| 166 | | BC_SIMPL | HI | DOWN | | indoors downwards heat flow | | | | 20.0 | 5.90 | 0 | | | | | EN6946 |
| 170 | | BC_SIMPL | HE | | | exterior | | | | 0.0 | 25.00 | 0 | | | | | EN6946 |
| 174 | | BC_SIMPL | HI | HOR | | interior (normal) horizontal heat flow | | | | 20.0 | 7.70 | 0 | | | | | EN6946 |
| 192 | | EQUIMAT | CAVITY | HOR | Xz | cavity non-vent physical horizontal flow | 0.90 / 0.90 | 0.659 | | | | | | | | | |
| 200 | | BC_SIMPL | HI | HOR | | cavity non-vent physical horizontal flow | | | | 5.6 | 7.70 | 0 | | | | | EN6946 |
| 216 | | BC_SIMPL | HI | DOWN | | cavity non-vent physical downwards flow | | | | 5.6 | 5.90 | 0 | | | | | EN6946 |
| 240 | | EQUIMAT | LAYER | HOR | X | | 0.90 / 0.90 | 0.067 | | | | | | | | | |

**Figure 42: Materials and boundary condition properties for analysis**

- For the under floor cavity, choose the type as BC_SIMPL with downward heat flow, using an under floor air temperature ($T_U$=5.564°C), calculated from Ground_Floor_Junction_Calculator.xlsx.

### Step 5: Define the 1D U-value and areas of flanking elements

- The areas of flanking elements are the internal dimensions (as per 2.2.2 of BR497)
  *Edit → Areas*
- 1D U-values are normally defined at the edges of flanking elements (wall and ground slab). 1D U-value of floor must be calculated from the indoor environment up to the underfloor air cavity.
  *Edit → U Values*

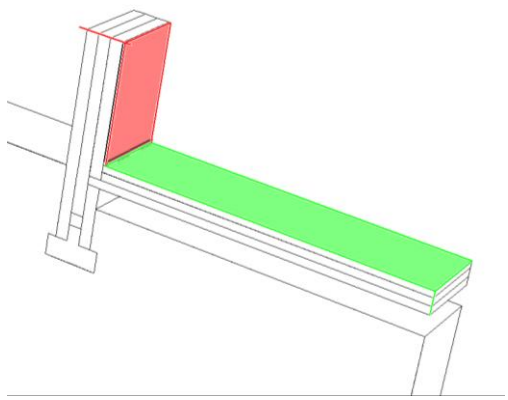

Areas

| No. | Xmin | Xmax | Ymin | Ymax | Zmin | Zmax | A [m²] |
|---|---|---|---|---|---|---|---|
| 1 | 7 | 7 | 0 | 1 | 10 | 13 | 1.44 |
| 2 | 5 | 11 | 0 | 1 | 9 | 9 | 4 |
| 3 | 0 | 0 | 0 | 0 | 0 | 0 | 0 |

U Values

| No. | Xmin | Xmax | Ymin | Ymax | Zmin | Zmax | U [W/m²K] | Enforced U [W/m²K] |
|---|---|---|---|---|---|---|---|---|
| 1 | 1 | 9 | 0 | 0 | 13 | 13 | 0.153 | |
| 2 | 10 | 10 | 0 | 0 | 6 | 11 | 0.305 | |
| 3 | 0 | 0 | 0 | 0 | 0 | 0 | 0.000 | |

**Figure 43: Areas 1D U-Values defined in TRISCO**

### Step 6: Run calculation and derive thermal properties manually

- Prepare the grid for analysis using 'Auto split' and then run calculation.

*Grid → Auto split…* (see section 2.2 for parameters)

- Calculate the total heat flow (Q) from the results tab of the text output. The heat flow from the indoor environment to the outdoor environment happens downward through the floor and horizontally through the walls. So, in this example project,
  Q= 18.9124 W + 4.9861 W = 23.8985 W
  *Output → Text output → Thermal calculation results*

| Col. | Type | Name | ta [°C] | Flow in [W] | Flow out [W] |
|---|---|---|---|---|---|
| 166 | BC_SIMPL | indoors_downwards_heat_fl | | 18.9124 | 0.0000 |
| 170 | BC_SIMPL | exterior | | 0.0000 | 12.7278 |
| 174 | BC_SIMPL | interior_(normal)_horizon | | 4.9861 | 0.0000 |
| 200 | BC_SIMPL | cavity_non-vent_physical_ | | 0.1618 | 0.4286 |
| 216 | BC_SIMPL | cavity_non-vent_physical_ | | 7.4256 | 18.3297 |

**Figure 44: Heat flow results in TRISCO**

**Calculate Ψ value:**

Linear thermal transmittance (Ψ) = 0.094 W/mK

$$\Psi = \frac{\phi - U'_w \times l_w\ (T_i - Te) - U'_{fd}\ (\frac{1}{2} \times b)\ (Ti - Tu)}{(Ti - Te)}$$

b Characteristic dimension of the floor (m) - as per 2.2.2, BR497

$l_w$ Length of wall (m) - as per 2.2.2, BR497

$U'_w$ 1D U-value of Wall (W/m²K) (shown as per Figure 43)

$U'_{fd}$ 1D U-value of floor deck (W/m²K) (shown as per Figure 43)

$T_i$ Indoor temperature

$T_e$ Outdoor temperature

$T_u$ Average underfloor air temperature (as calculated above in step-4)

Φ Heat flow (as calculated in step-6)

Alternatively, you could use Ground_Floor_Junction_Calculator.xlsx, to calculate the Ψ value.

**Note, as per BR497:**

- The length of the flanking element (wall) is 1000mm or 3 times thickness of wall; whichever is greater.
- The level of the external soil (in the model) should be set 150 mm below the internal floor finish.
- The characteristic dimensions of the floor (b) in the model should be set to 8 m, which corresponds to a P/A of 0.25 (section 2.2.2, BR497).
- The example above is a 2D case, in which the floor depth is b/2 and the soil depth used for the analysis should be taken as 2.5 × b.
- The underfloor space is at an intermediate temperature, Tu, between Ti and Te. Tu should be calculated from the heat balance in accordance with the Annex-G of EN ISO-13370 for

a P/A of 0.5. This results in a characteristic dimension (B)=4m. But this is only limited to calculate the underfloor air temperature Tu. However, for the later steps to determine the Ψ value, we need to model the characteristic dimension of floor (B=8m) mentioned as per section 2.2.2, BR497.

- The underfloor temperature Tu shall be calculated as per EN ISO 13370 (G.1) or BRE U value calculator. Alternatively, you can also use Ground_Floor_Junction_Calculator.xlsx.
- When calculating Tu, ventilation of the underfloor space should be determined in accordance with Annex G of BS EN ISO 13370 assuming the wind speed as 5 m/s, shielding factor as 0.05 and the ventilation openings equivalent to 0.0015 m² per metre length of the floor perimeter.
- $U'_{fd}$ is the U-value of the floor deck. If the floor deck has no repeating thermal bridging, $U'_{fd}$ is 1D, and can be directly calculated from *Edit → U values* (in accordance with EN ISO 6946). Where repeating thermal bridges are present, only those bridges within half of the repeating dimension from the junction need to be modelled. Check BR497 3.1.3.1 for more detail.

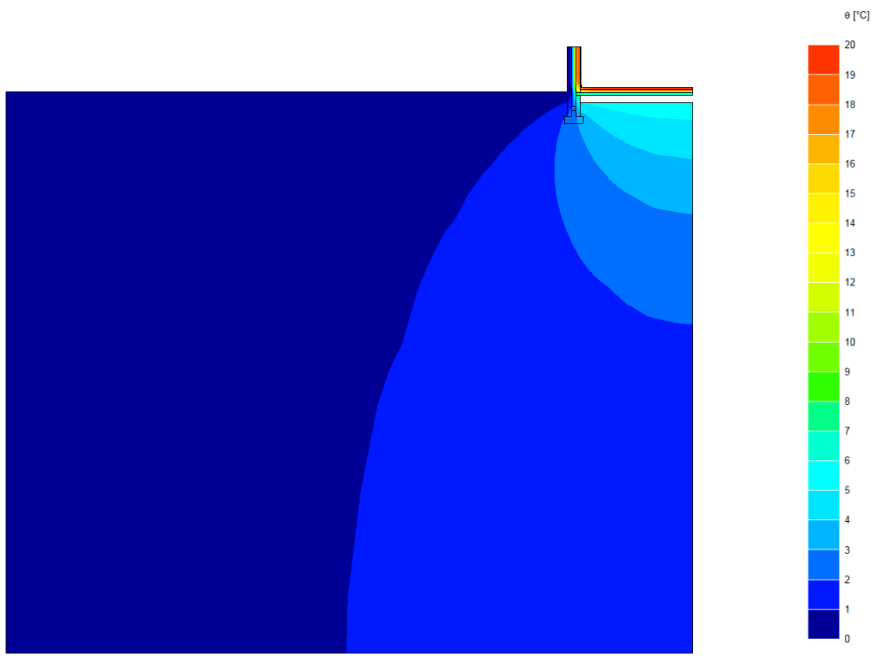


**Figure 45: Isotherms**

## 9. E6 – Intermediate floor same dwelling

E6_intermediate_slab_same_dwelling.trc

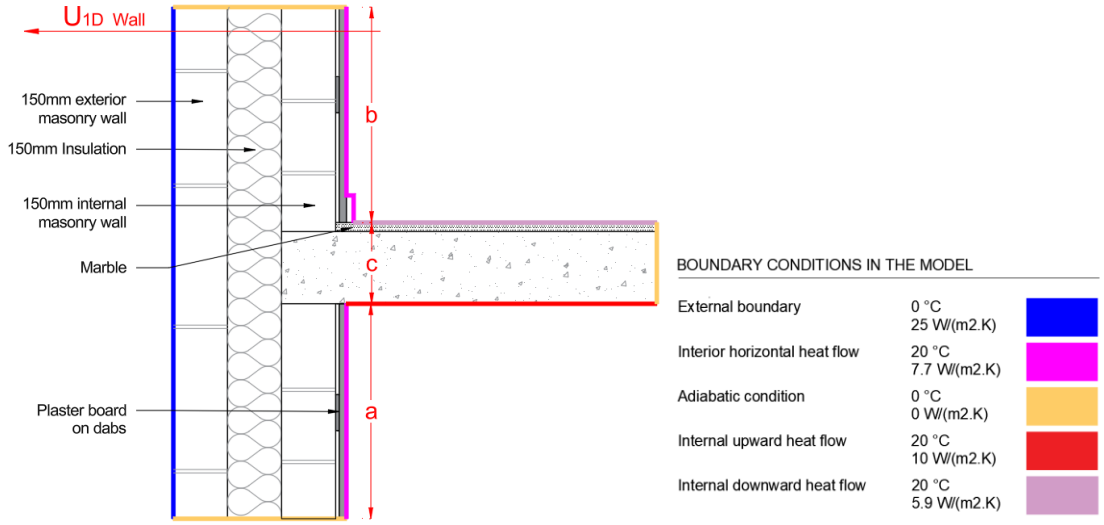


**Figure 46: Intermediate slab within the same dwelling – Junction E6**

### Step 1: Identify junction type

- E6 – Intermediate floor same dwelling

### Step 2: Refer to appropriate convention(s) within BR497

- 4.5.1 Intermediate floor.
- 2.5 Boundary conditions.

### Step 3: Prepare geometry in DXF format: E6_intermediate_slab_same_dwelling.dxf

See section 2.1 in this document.

### Step 4: Define material properties and boundary conditions

- Boundary conditions, *surface heat transfer coefficients (as per section 2.5 of BR497)*

Colours

| Col. | | Type | Subtype | Physical flow dir. | Geometrical flow dir. | Name | ε1 / ε2 [- / -] | λ [W/mK] | ε [-] | θ [°C] | h [W/m²K] | q [W/m²] | θa [°C] | hc [W/m²K] | Pc [W] | θr [°C] | Standard |
|---|---|---|---|---|---|---|---|---|---|---|---|---|---|---|---|---|---|
| 49 | | MATERIAL | | | | marble | | 3.500 | | | | | | | | | |
| 120 | | MATERIAL | | | | concrete density 2400 kg/m3 | | 2.000 | | | | | | | | | |
| 132 | | MATERIAL | | | | masonry light | | 0.220 | | | | | | | | | |
| 133 | | MATERIAL | | | | insulation 0.030 W/mK | | 0.030 | | | | | | | | | |
| 148 | | MATERIAL | | | | masonry medium density | | 0.320 | | | | | | | | | |
| 161 | | MATERIAL | | | | gypsum plasterboard | | 0.250 | | | | | | | | | |
| 166 | | BC_SIMPL | HI | DOWN | | indoors downwards heat flow | | | | 20.0 | 5.90 | 0 | | | | | EN6946 |
| 170 | | BC_SIMPL | HE | | | exterior | | | | 0.0 | 25.00 | 0 | | | | | EN6946 |
| 174 | | BC_SIMPL | HI | HOR | | interior (normal) horizontal heat flow | | | | 20.0 | 7.70 | 0 | | | | | EN6946 |
| 190 | | BC_SIMPL | HI | UP | | indoors; upwards heat flow | | | | 20.0 | 10.00 | 0 | | | | | EN6946 |
| 240 | | EQUIMAT | LAYER | HOR | X | | 0.90 / 0.90 | 0.066 | | | | | | | | | EN6946 |

**Figure 47: Materials and boundary condition properties for analysis**

### Step 5: Define the 1D U-value and areas of flanking elements

- The areas of flanking elements are the internal dimensions (as per 2.2.2 of BR497)
  *Edit → Areas*
- 1D U-Values are defined at the edges of flanking elements.

*Edit → U Values*

- Length of the flanking element of the wall (lw) over which 1D U-Value (Uw) apply should include the thickness of the slab.
  lw = a + b + c

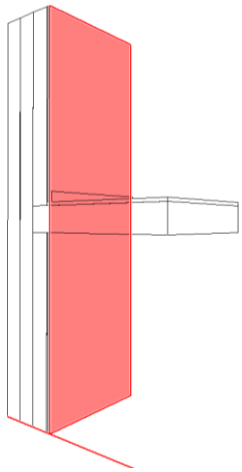

Areas

| No. | Xmin | Xmax | Ymin | Ymax | Zmin | Zmax | A [m²] |
|---|---|---|---|---|---|---|---|
| 1 | 6 | 6 | 0 | 1 | 0 | 7 | 3.105 |
| 2 | 0 | 0 | 0 | 0 | 0 | 0 | 0 |
| 3 | 0 | 0 | 0 | 0 | 0 | 0 | 0 |

U Values

| No. | Xmin | Xmax | Ymin | Ymax | Zmin | Zmax | U [W/m²K] | Enforced U [W/m²K] |
|---|---|---|---|---|---|---|---|---|
| 1 | 1 | 8 | 0 | 0 | 0 | 0 | 0.153 | |
| 2 | 0 | 0 | 0 | 0 | 0 | 0 | 0.000 | |
| 3 | 0 | 0 | 0 | 0 | 0 | 0 | 0.000 | |

**Figure 48: 1D U-values and area of flanking element for analysis**

**Step 6: Define derived thermal properties and run the calculation**

- Choose the output required to calculate from the analysis (Ψ-value / temperature factor ($f_{Rsi}$))
  *Edit → Derived Thermal Properties…*
- Prepare the grid for analysis using 'Auto split' and then run the calculation.
  *Grid → Auto split…* (see section 2.2 for parameters)

**Note, as per BR497:**

- Length of the wall above and below the slab is 1000mm or 3 times the thickness of the wall; whichever is greater.
- The indoor boundary conditions are defined with 3 colour types: horizontal (174), downward (166) and upward heat flow (190) (see Figure 46).

**Calculated Result from the analysis:**

Linear thermal transmittance (Ψ) = 0.008 W/mK.

$$\Psi = \frac{\Phi}{(Ti - Te)} - U1 \times A1 = \frac{9.652}{(20 - 0)} - 0.153 \times 3.105 = 0.008 \text{ W/mK}$$

Temperature factor ($f_{R_{si}}$)= 0.978 (Check section 2.5 for critical temperature factors $f_c$)

**Default Ψ (as per SAP version 10.2)**

Intermediate floor within a dwelling (E6) = 0.14 W/mK

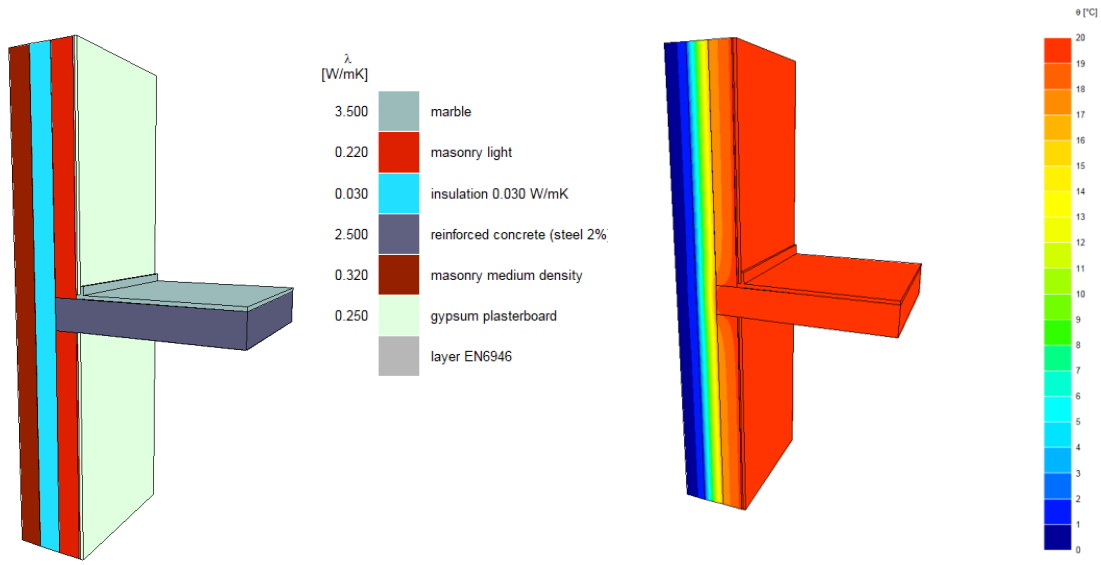


**Figure 49: Material properties and Isotherms**

## 10. E7 – Intermediate floor between dwelling

E7_intermediate_slab_between_dwelling.trc

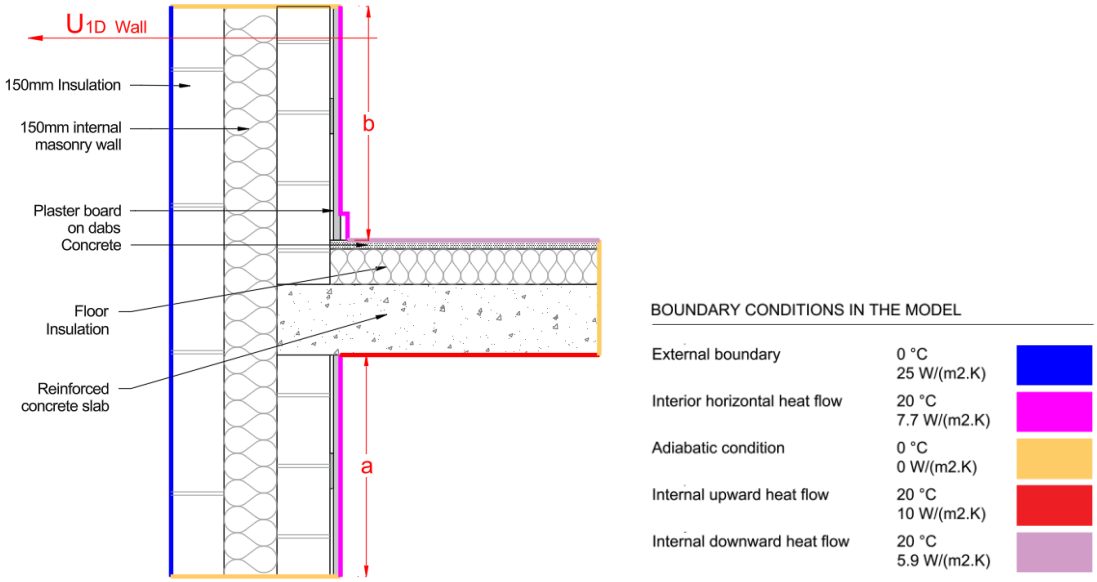


**Figure 50: Intermediate floor between dwelling – Junction E7**

### Step 1: Identify junction type

E7 – Intermediate between dwelling

### Step 2: Refer to appropriate convention(s) within BR497

- 4.5.1 Intermediate floor
- 2.5 Boundary conditions

### Step 3: Prepare geometry in DXF format: E7_intermediate_slab_between_dwelling.dxf

See section 2.1 in this document.

### Step 4: Define material properties and boundary conditions

- Boundary conditions, surface heat transfer coefficients (as per section 2.5 of BR497)

Colours

| Col. | | Type | Subtype | Physical flow dir. | Geometrical flow dir. | Name | ε1 / ε2 [- / -] | λ [W/mK] | ε [-] | θ [°C] | h [W/m²K] | q [W/m²] | θa [°C] | hc [W/m²K] | Pc [W] | θr [°C] | Standard |
|---|---|---|---|---|---|---|---|---|---|---|---|---|---|---|---|---|---|
| 71 | | MATERIAL | | | | fibreboard incl. MDF(e) 250 kg/m3 | | 0.070 | | | | | | | | | |
| 120 | | MATERIAL | | | | concrete density 2400 kg/m3 | | 2.000 | | | | | | | | | |
| 132 | | MATERIAL | | | | masonry light | | 0.220 | | | | | | | | | |
| 133 | | MATERIAL | | | | insulation 0.030 W/mK | | 0.030 | | | | | | | | | |
| 136 | | MATERIAL | | | | reinforced concrete (steel 2%) | | 2.500 | | | | | | | | | |
| 148 | | MATERIAL | | | | masonry medium density | | 0.320 | | | | | | | | | |
| 151 | | MATERIAL | | | | insulation 0.035 W/mK | | 0.035 | | | | | | | | | |
| 161 | | MATERIAL | | | | gypsum plasterboard | | 0.250 | | | | | | | | | |
| 166 | | BC_SIMPL | HI | DOWN | | indoors downwards heat flow | | | | 20.0 | 5.90 | 0 | | | | | EN6946 |
| 170 | | BC_SIMPL | HE | | | exterior | | | | 0.0 | 25.00 | 0 | | | | | EN6946 |
| 174 | | BC_SIMPL | HI | HOR | | interior (normal) horizontal heat flow | | | | 20.0 | 7.70 | 0 | | | | | EN6946 |
| 190 | | BC_SIMPL | HI | UP | | indoors; upwards heat flow | | | | 20.0 | 10.00 | 0 | | | | | EN6946 |
| 240 | | EQUIMAT | LAYER | HOR | X | | 0.90 / 0.90 | 0.069 | | | | | | | | | EN6946 |

**Figure 51: Materials and boundary condition properties for analysis**

**Step 5: Define the 1D U-value and areas of flanking elements**

- The areas of flanking elements are the internal dimensions (as per section 2.2.2 of BR497).
  *Edit → Areas.*
- 1D Values are defined at the edges of flanking elements, and the required minimum length of wall and floor in the model as per 2.2.2 of BR497.
  *Edit → U Values.*

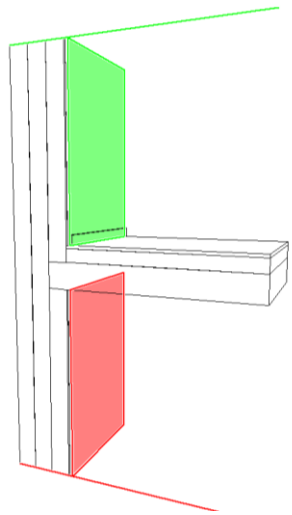

U Values

| No. | Xmin | Xmax | Ymin | Ymax | Zmin | Zmax | U [W/m²K] | Enforced U [W/m²K] |
|---|---|---|---|---|---|---|---|---|
| 1 | 1 | 9 | 0 | 0 | 0 | 0 | 0.153 | |
| 2 | 1 | 9 | 0 | 0 | 16 | 16 | 0.153 | |
| 3 | 0 | 0 | 0 | 0 | 0 | 0 | 0.000 | |

Areas

| No. | Xmin | Xmax | Ymin | Ymax | Zmin | Zmax | A [m²] |
|---|---|---|---|---|---|---|---|
| 1 | 6 | 6 | 0 | 1 | 0 | 7 | 1.44 |
| 2 | 6 | 6 | 0 | 1 | 10 | 16 | 1.44 |
| 3 | 0 | 0 | 0 | 0 | 0 | 0 | 0 |

**Figure 52: 1D U-values and area of flanking element for analysis**

**Step 6: Define derived thermal properties and run the calculation**

- Choose the output required to calculate from the analysis (Ψ-value / temperature factor ($f_{Rsi}$)).
  *Edit → Derived Thermal Properties…*
- Prepare the grid for analysis using 'Auto split' and then run the calculation.
  *Grid → Auto split…* (see section 2.2 for parameters)

**Note, as per BR497:**

- The length of the wall above and below the slab is 1000mm or 3 times the thickness of wall, whichever is greater.
- The calculated Ψ – psi value from software (using derived thermal properties) will be split up equally into halves for both dwellings.

**Calculated Result from the analysis:**

Linear thermal transmittance (Ψ) from software = 0.057 W/mK

$$\Psi = \frac{\Phi}{(Ti - Te)} - U \times A1 - U2 \times A2 = \frac{9.950}{(20 - 0)} - 0.153 \times 1.44 - 0.153 \times 1.44 = 0.057 \text{ W/mK}$$

Actual Linear thermal transmittance of Junction = Ψ/2 = 0.057/2 = 0.0285 W/mK

Temperature factor ($f_{R_{si}}$)= 0.941 (Check section 2.5 for critical temperature factors $f_c$)

**Default Ψ (as per SAP version 10.2):**

Party floor between dwellings (in blocks of flats) (E7) = 0.28 W/m·K

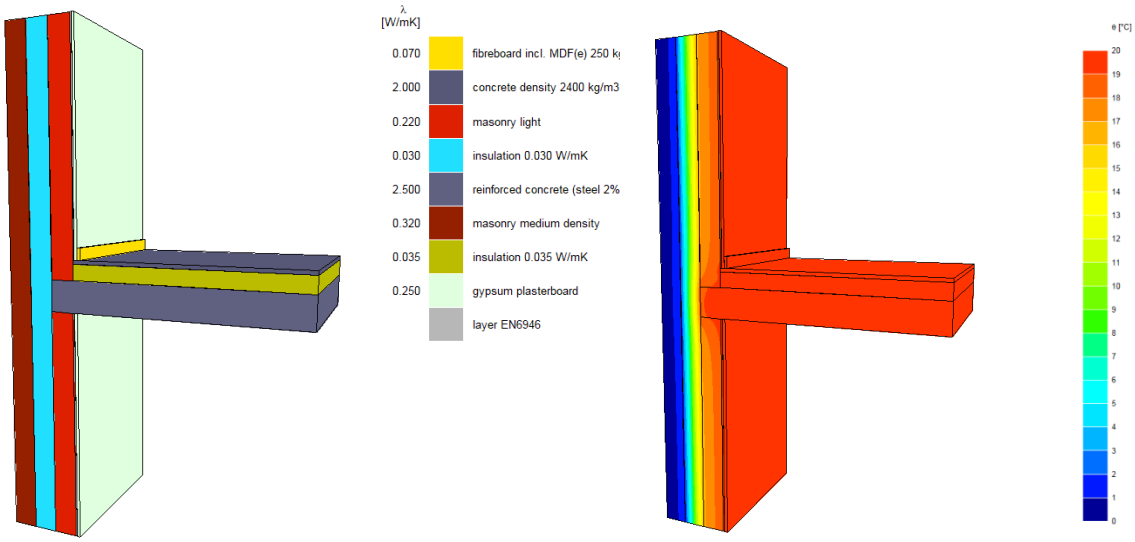


**Figure 53: Material properties and Isotherms**

## 11. E10 – Eaves insulation at ceiling

E10_EAVES_INSULATED_CEILING.trc

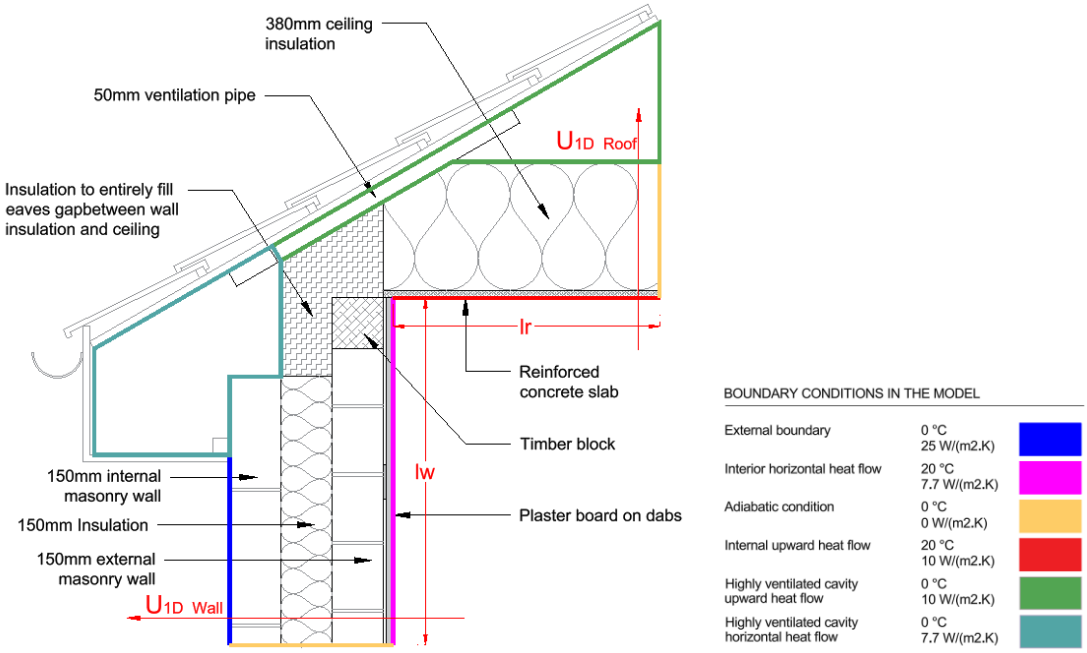


**Figure 54: Eaves insulation at ceiling – Junction E10**

### Step 1: Identify junction type

E10 – Eaves (insulation at ceiling level).

### Step 2: Refer to appropriate convention(s) within BR497

- 4.2.3 Sloping rafter to flat ceiling (insulated at ceiling).
- 2.5 Boundary conditions

### Step 3: Prepare geometry in DXF format: E10_EAVES_INSULATED_CEILING.dxf

See section 2.1 in this document.

### Step 4: Define material properties and boundary conditions

- Boundary conditions, surface heat transfer coefficients (as per section 2.5 of BR497)

Colours

| Col. | | Type | Subtype | Physical flow dir. | Geometrical flow dir. | Name | ε1 / ε2 [- / -] | λ [W/mK] | ε [-] | θ [°C] | h [W/m²K] | q [W/m²] | θa [°C] | hc [W/m²K] | Pc [W] | θr [°C] | Standard |
|---|---|---|---|---|---|---|---|---|---|---|---|---|---|---|---|---|---|
| 15 | | MATERIAL | | | | softwood 500 kg/m3 | | 0.130 | | | | | | | | | |
| 71 | | MATERIAL | | | | fibreboard incl. MDF(e) 250 kg/m3 | | 0.070 | | | | | | | | | |
| 131 | | MATERIAL | | | | insulation 0.040 W/mK | | 0.040 | | | | | | | | | |
| 132 | | MATERIAL | | | | masonry light | | 0.220 | | | | | | | | | |
| 133 | | MATERIAL | | | | insulation 0.030 W/mK | | 0.030 | | | | | | | | | |
| 148 | | MATERIAL | | | | masonry medium density | | 0.320 | | | | | | | | | |
| 151 | | MATERIAL | | | | insulation 0.035 W/mK | | 0.035 | | | | | | | | | |
| 161 | | MATERIAL | | | | gypsum plasterboard | | 0.250 | | | | | | | | | |
| 170 | | BC_SIMPL | HE | | | exterior | | | | 0.0 | 25.00 | 0 | | | | | EN6946 |
| 174 | | BC_SIMPL | HI | HOR | | interior (normal) horizontal heat flow | | | | 20.0 | 7.70 | 0 | | | | | EN6946 |
| 177 | | BC_SIMPL | HI | UP | | highly ventilated cavity upwards heat flow | | | | 0.0 | 10.00 | 0 | | | | | EN6946 |
| 185 | | BC_SIMPL | HI | HOR | | highly ventilated cavity; horizontal heat flow | | | | 0.0 | 7.70 | 0 | | | | | EN6946 |
| 190 | | BC_SIMPL | HI | UP | | indoors; upwards heat flow | | | | 20.0 | 10.00 | 0 | | | | | EN6946 |
| 240 | | EQUIMAT | LAYER | HOR | X | | 0.90 / 0.90 | 0.067 | | | | | | | | | EN6946 |

**Figure 55: Materials and boundary condition properties for analysis**

**Step 5: Define the 1D U-value and areas of flanking elements**

- The areas of flanking elements are the internal dimensions (as per 2.2.2 of BR497)
  *Edit → Areas*
- 1D Values are defined at the edges of flanking elements, and the required minimum length of wall and floor in the model as per 2.2.2 of BR497.
  *Edit → U Values*
- For the ceiling, the U-value must be calculated from the indoor boundary to the ventilated cavity only.

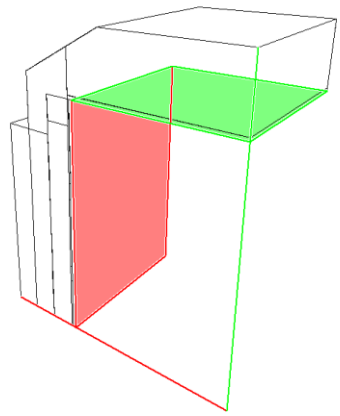

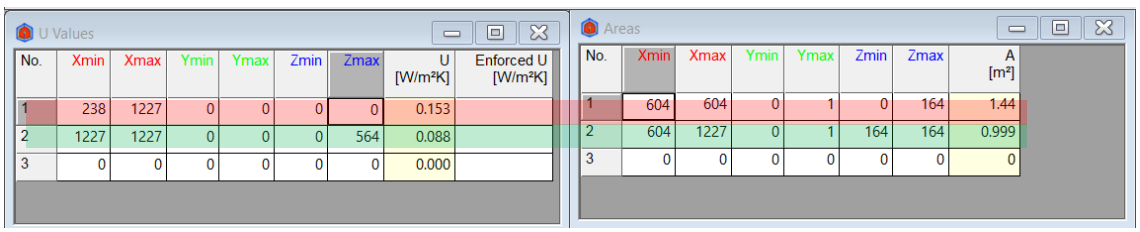

U Values

| No. | Xmin | Xmax | Ymin | Ymax | Zmin | Zmax | U [W/m²K] | Enforced U [W/m²K] |
|---|---|---|---|---|---|---|---|---|
| 1 | 238 | 1227 | 0 | 0 | 0 | 0 | 0.153 | |
| 2 | 1227 | 1227 | 0 | 0 | 0 | 564 | 0.088 | |
| 3 | 0 | 0 | 0 | 0 | 0 | 0 | 0.000 | |

Areas

| No. | Xmin | Xmax | Ymin | Ymax | Zmin | Zmax | A [m²] |
|---|---|---|---|---|---|---|---|
| 1 | 604 | 604 | 0 | 1 | 0 | 164 | 1.44 |
| 2 | 604 | 1227 | 0 | 1 | 164 | 164 | 0.999 |
| 3 | 0 | 0 | 0 | 0 | 0 | 0 | 0 |

**Figure 56: 1D U-values and area of flanking element for analysis**

**Step 6: Define derived thermal properties and run the calculation**

- Choose the output required to calculate from the analysis (Ψ-value / temperature factor ($f_{Rsi}$))
  *Edit → Derived Thermal Properties…*
- Prepare the grid for analysis using 'Auto split' and then run the calculation.
  *Grid → Auto split…* (see section 2.2 for parameters)

**Note, as per BR497:**

- The length of the wall below the ceiling is 1000mm or 3 times the thickness of the wall, whichever is greater. The length of the ceiling for analysis is 1000mm.
- The indoor boundary conditions are defined with 2 colour types: horizontal (174) and upward heat flow (190). The outdoor is treated as an highly ventilated cavity, so, for which the interior surface coefficients with the exterior temperature should be used (177) (185) (see Figure 54).

**Calculated Result from the analysis:**

Linear thermal transmittance (Ψ) = 0.050 W/mK

$$\Psi = \frac{\Phi}{(Ti - Te)} - U1 \times A1 - U2 \times A2 = \frac{7.162}{(20 - 0)} - 0.153 \times 1.44 - 0.088 \times 1 = 0.050 \text{ W/mK}$$

Temperature factor ($f_{R_{si}}$)= 0.948 (Check section 2.5 for critical temperature factors $f_c$)

**Default Ψ (as per SAP version 10.2)**

Eaves (insulation at ceiling level) = 0.12 W/mK

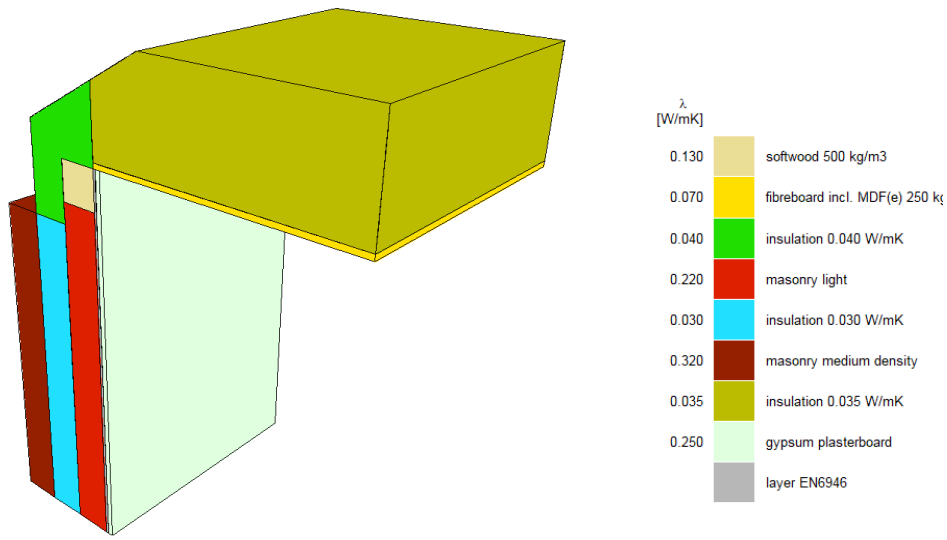


**Figure 57: Material properties**

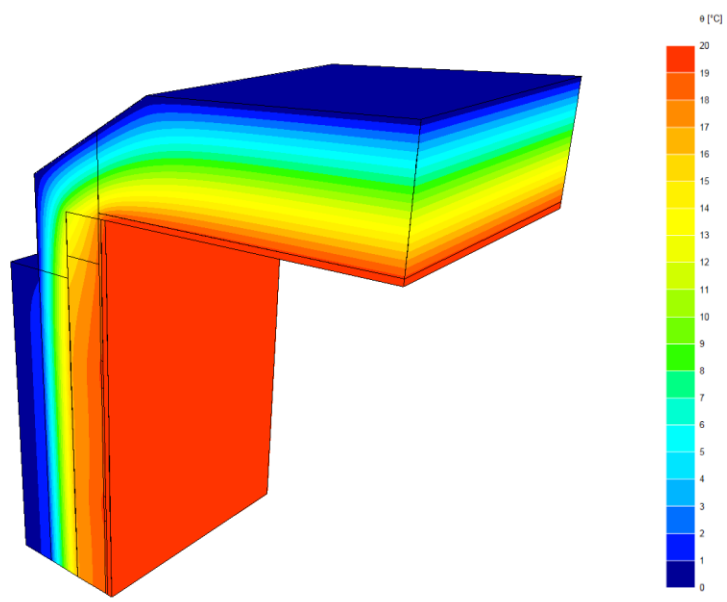


**Figure 58: Isotherms**

## 12. E11 – Eaves insulation at rafter

E11_EAVES_INSULATION_AT_RAFTER.trc

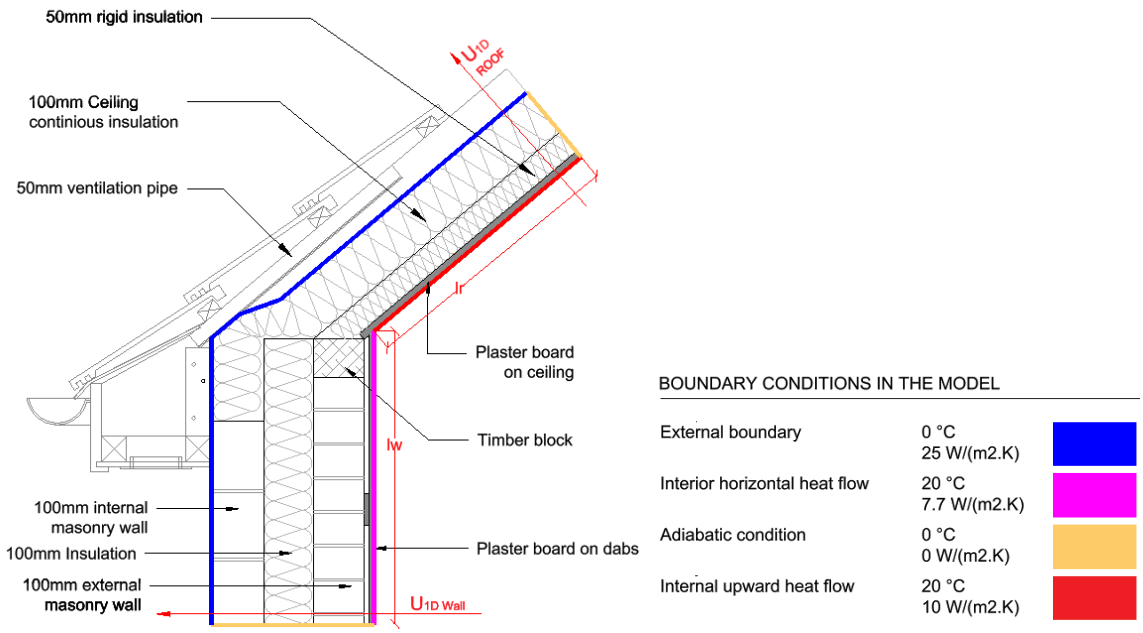


**Figure 59: Eaves insulation at rafter–junction E11**

### Step 1: Identify junction type

- E11 - Eaves (Insulation at rafter level).

### Step 2: Refer to appropriate convention(s) within BR497

- 4.2.5 wall to rafter.
- 2.5 Boundary condition.

### Step 3: Prepare geometry in DXF format: E11_EAVES_INSULATION_AT_RAFTER.dxf

See section 2.1 in this document.

### Step 4: Define material properties and boundary conditions

- Boundary conditions, surface heat transfer coefficients (as per section 2.5 of BR497). It is important to define adiabatic conditions at the roof cut, as it does not lie in an orthogonal plane.

Colours

| Col. | | Type | Subtype | Physical flow dir. | Geometrical flow dir. | Name | ε1 / ε2 [- / -] | λ [W/mK] | ε [-] | θ [°C] | h [W/m²K] | q [W/m²] | θa [°C] | hc [W/m²K] | Pc [W] | θr [°C] | Standard |
|---|---|---|---|---|---|---|---|---|---|---|---|---|---|---|---|---|---|
| 15 | | MATERIAL | | | | softwood 500 kg/m3 | | 0.130 | | | | | | | | | |
| 71 | | MATERIAL | | | | fibreboard incl. MDF(e) 250 kg/m3 | | 0.070 | | | | | | | | | |
| 131 | | MATERIAL | | | | insulation 0.040 W/mK | | 0.040 | | | | | | | | | |
| 132 | | MATERIAL | | | | masonry light | | 0.220 | | | | | | | | | |
| 133 | | MATERIAL | | | | insulation 0.030 W/mK | | 0.030 | | | | | | | | | |
| 148 | | MATERIAL | | | | masonry medium density | | 0.320 | | | | | | | | | |
| 151 | | MATERIAL | | | | insulation 0.035 W/mK | | 0.035 | | | | | | | | | |
| 161 | | MATERIAL | | | | gypsum plasterboard | | 0.250 | | | | | | | | | |
| 170 | | BC_SIMPL | HE | | | exterior | | | | 0.0 | 25.00 | 0 | | | | | EN6946 |
| 174 | | BC_SIMPL | HI | HOR | | interior (normal) horizontal heat flow | | | | 20.0 | 7.70 | 0 | | | | | EN6946 |
| 190 | | BC_SIMPL | HI | UP | | indoors; upwards heat flow | | | | 20.0 | 10.00 | 0 | | | | | EN6946 |
| 191 | | BC_SIMPL | NIHIL | | | adiabatic | | | | 0.0 | 0.00 | 0 | | | | | NIHIL |
| 240 | | EQUIMAT | LAYER | HOR | X | | 0.90 / 0.90 | 0.075 | | | | | | | | | EN6946 |

**Figure 60: Materials and boundary condition properties for analysis**

### Step 5: Define the 1D U-value and areas of flanking elements

- TRISCO is limited to rectangular shapes and is not capable of detecting areas or U-values of sloped elements[1]. Consequently, from the TRISCO output results we will manually calculate the linear thermal transmittance (Ψ value).
- The areas of the flanking elements are the internal dimensions (as per 2.2.2 of BR497).
  The area of roof, is calculated manually which is 1m². The area of wall can be either calculated manually or from TRISCO (*Edit → Areas*).
- 1D U-values are defined at the edges of flanking elements, and 1D U-value of the roof must be entered as an enforced value.

$$\text{U roof} = \frac{1}{\frac{1}{h_i}+\frac{s1}{\lambda 1}+\frac{s2}{\lambda 2}+\frac{s3}{\lambda 3}+\frac{1}{h_e}} = \frac{1}{\frac{1}{10}+\frac{0.015}{0.07}+\frac{0.05}{0.04}+\frac{0.1}{0.035}+\frac{1}{25}} = 0.224 \text{ W/m}^2\text{K}$$

- The 1D U value of the wall (0.223 W/m²K) can be manually calculated or directly noted from U values window, because the wall is an orthogonal element.
  **Edit → U Values**

U Values

| No. | Xmin | Xmax | Ymin | Ymax | Zmin | Zmax | U [W/m²K] | Enforced U [W/m²K] |
|---|---|---|---|---|---|---|---|---|
| 1 | 1 | 1021 | 0 | 0 | 0 | 0 | 0.224 | |
| 2 | 0 | 0 | 0 | 0 | 0 | 0 | 0.000 | |
| 3 | 0 | 0 | 0 | 0 | 0 | 0 | 0.000 | |

**Figure 61: 1D U-values of wall**

### Step 6: Run the calculation

- Prepare the grid for analysis using 'Auto split' and then run the calculation.
  *Grid → Auto split…* (see section 2.2 for parameters)
- Run the calculation, then from text output, under the thermal calculation results tab, note the total 2D heat flow for the exterior boundary conditions (colour 170) is 9.274 W.

### Note, as per BR497:

- The length of the wall below the ceiling is 1000mm or 3 times the thickness of wall; whichever is greater. The length of the ceiling for analysis is 1000mm.

[1] SOLIDO which is an extension of TRISCO can handle free forms in 3D, and thus also sloped surfaces. BISCO can handle free forms in 2D, and thus sloped surface in 2D.

The indoor boundary conditions are defined with 2 colour types: horizontal (174) and upward heat flow (190). (see Figure 59).

- The values under 'horizontal' apply to heat flow directions ±30° from the horizontal plane (for example if a roof slope is less than 30°, the horizontal values should be used, otherwise the upwards values are used).

**Calculated Result from the analysis:**

Linear thermal transmittance (Ψ) = 0.016 W/mK

$$\Psi = \frac{\Phi}{(Ti - Te)} - U1 \times A1 - U2 \times A2 = \frac{9.274}{(20 - 0)} - 0.224 \times 1 - 0.224 \times 1 = 0.016 \text{ W/mK}$$

Temperature factor ($f_{R_{si}}$)= 0.961 (Check section 2.5 for critical temperature factors $f_c$)

**Default Ψ (as per SAP version 10.2)**

Eaves (insulation at rafter level) = 0.15 W/m K

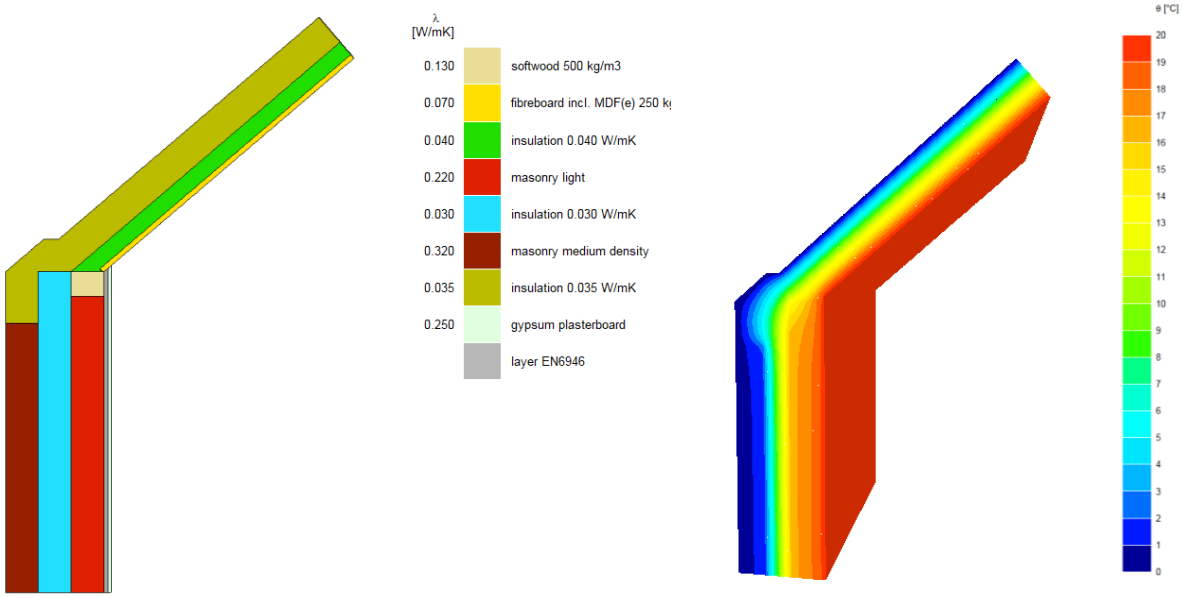


**Figure 62: Material properties and Isotherms**

## 13. E12 – Gable insulation at ceiling

E12_GABLE_INSULATED_CEILING.trc

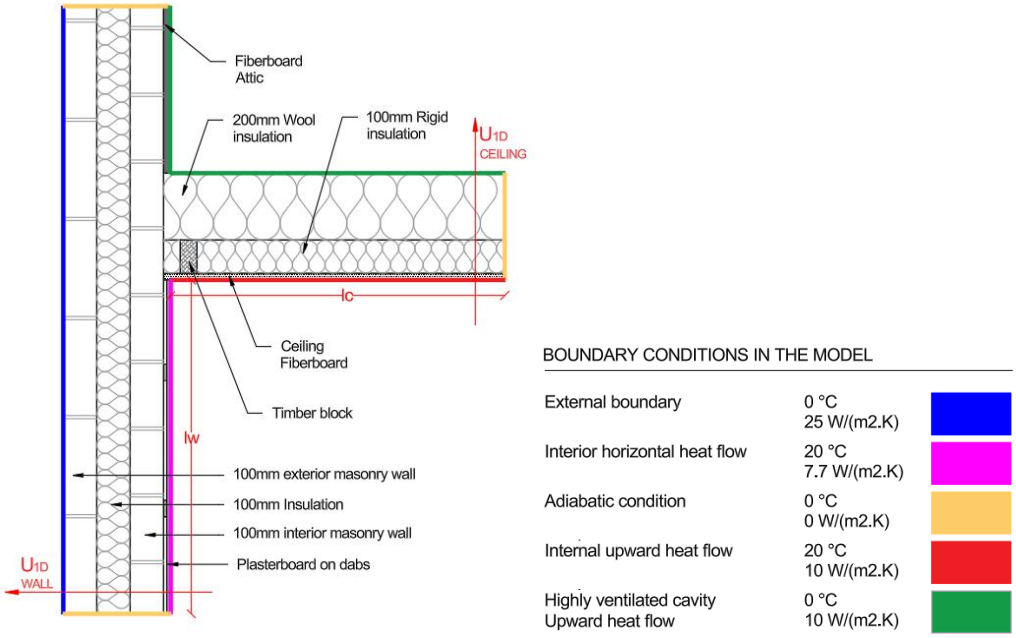


**Figure 63: Gable insulation at the ceiling – Junction E12**

### Step 1: Identify junction type

E12 – Gable insulation at ceiling level

### Step 2: Refer to appropriate convention(s) within BR497

- 4.1.2 Roof gable (insulated at ceiling)
- 2.5 Boundary conditions

### Step 3: Prepare geometry in DXF format: E12_GABLE_INSULATED_CEILING.dxf

See section 2.1 in this document.

### Step 4: Define material properties and boundary conditions

- Boundary conditions, surface heat transfer coefficients (as per section 2.5 of BR497)

Colours

| Col. | | Type | Subtype | Physical flow dir. | Geometrical flow dir. | Name | ε1 / ε2 [- / -] | λ [W/mK] | ε [-] | θ [°C] | h [W/m²K] | q [W/m²] | θa [°C] | hc [W/m²K] | Pc [W] | θr [°C] | Standard |
|---|---|---|---|---|---|---|---|---|---|---|---|---|---|---|---|---|---|
| 15 | | MATERIAL | | | | softwood 500 kg/m3 | | 0.130 | | | | | | | | | |
| 71 | | MATERIAL | | | | fibreboard incl. MDF(e) 250 kg/m3 | | 0.070 | | | | | | | | | |
| 131 | | MATERIAL | | | | insulation 0.040 W/mK | | 0.040 | | | | | | | | | |
| 132 | | MATERIAL | | | | masonry light | | 0.220 | | | | | | | | | |
| 133 | | MATERIAL | | | | insulation 0.030 W/mK | | 0.030 | | | | | | | | | |
| 148 | | MATERIAL | | | | masonry medium density | | 0.320 | | | | | | | | | |
| 151 | | MATERIAL | | | | insulation 0.035 W/mK | | 0.035 | | | | | | | | | |
| 161 | | MATERIAL | | | | gypsum plasterboard | | 0.250 | | | | | | | | | |
| 170 | | BC_SIMPL | HE | | | exterior | | | | 0.0 | 25.00 | 0 | | | | | EN6946 |
| 174 | | BC_SIMPL | HI | HOR | | interior (normal) horizontal heat flow | | | | 20.0 | 7.70 | 0 | | | | | EN6946 |
| 177 | | BC_SIMPL | HI | UP | | highly ventilated cavity upwards heat flow | | | | 0.0 | 10.00 | 0 | | | | | EN6946 |
| 190 | | BC_SIMPL | HI | UP | | indoors; upwards heat flow | | | | 20.0 | 10.00 | 0 | | | | | EN6946 |
| 240 | | EQUIMAT | LAYER | HOR | X | | 0.90 / 0.90 | 0.071 | | | | | | | | | |

**Figure 64: Materials and boundary condition properties for analysis**

**Step 5: Define the 1D U-value and areas of flanking elements**

- The areas of flanking elements are the internal dimensions (as per 2.2.2 of BR497)
  *Edit → Areas.*
- 1D Values are defined at the edges of flanking elements, and the required minimum length of wall and floor in the model as per 2.2.2 of BR497.
  *Edit → U Values.*

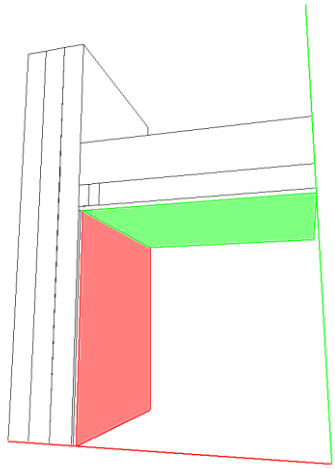

Areas

| No. | Xmin | Xmax | Ymin | Ymax | Zmin | Zmax | A [m²] |
|---|---|---|---|---|---|---|---|
| 1 | 7 | 7 | 0 | 1 | 0 | 6 | 1 |
| 2 | 7 | 10 | 0 | 1 | 6 | 6 | 0.999999 |
| 3 | 0 | 0 | 0 | 0 | 0 | 0 | 0 |

U Values

| No. | Xmin | Xmax | Ymin | Ymax | Zmin | Zmax | U [W/m²K] | Enforced U [W/m²K] |
|---|---|---|---|---|---|---|---|---|
| 1 | 1 | 10 | 0 | 0 | 0 | 0 | 0.224 | |
| 2 | 10 | 10 | 0 | 0 | 0 | 10 | 0.114 | |
| 3 | 0 | 0 | 0 | 0 | 0 | 0 | 0.000 | |

**Figure 65: Areas and 1D U-values of the flanking element for analysis**

**Step 6: Define derived thermal properties and run the calculation**

- Choose the output required to calculate from the analysis (Ψ-value / temperature factor ($f_{Rsi}$))
  *Edit → Derived Thermal Properties…*
- Prepare the grid for analysis using 'Auto split' and then run the calculation.
  *Grid → Auto split…* (see section 2.2 for parameters)

**Note, as per BR497:**

- The length of the wall above and below the slab is 1000mm or 3 times the thickness of wall, whichever is greater.
- The indoor boundary conditions are defined with 2 colour types: horizontal (174) and upward heat flow (190). The outdoor is treated as an highly ventilated cavity, so, for which the interior surface coefficient with the exterior temperature should be used (177) (see Figure 63).

**Calculated Result from the analysis:**

Linear thermal transmittance (Ψ) from software = 0.064 W/mK

$$\Psi = \frac{\Phi}{(\mathrm{Ti} - \mathrm{Te})} - \mathrm{U1} \times \mathrm{A1} - \mathrm{U2} \times \mathrm{A2} = \frac{8.060}{(20 - 0)} - 0.224 \times 1 - 0.115 \times 1 = 0.064\ \mathrm{W/mK}$$

Temperature factor ($f_{R_{si}}$)= 0.911 (Check section 2.5 for critical temperature factors $f_c$)

**Default Ψ (as per SAP version 10.2)**

Gable (insulation at ceiling level) = 0.25 W/mK

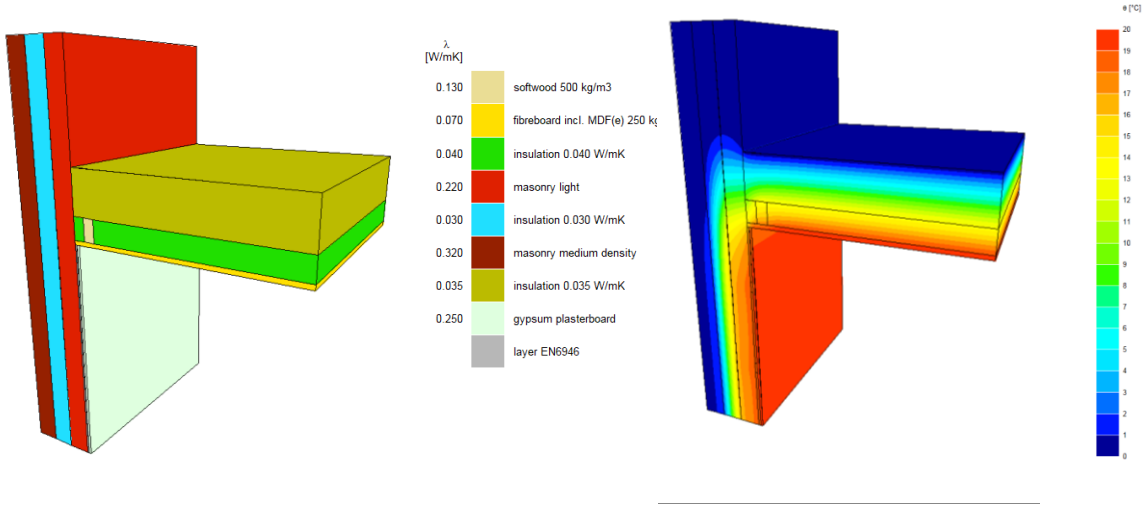


**Figure 66: Material properties and Isotherms**

## 14. E13 – Pitched roof insulation at the rafter

E13_Pitched_Roof_Gable_Insulation_at_Rafter.trc

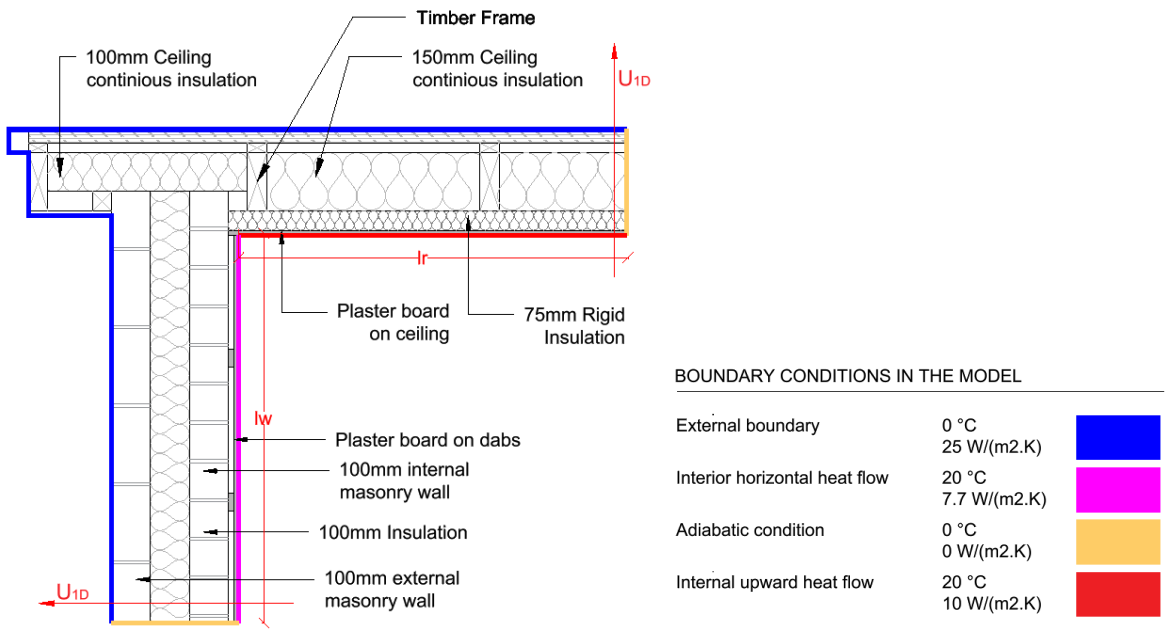


**Figure 67: Gable insulation at rafter – Junction E13**

### Step 1: Identify junction type

Gable (insulation at rafter level).

### Step 2: Refer to appropriate convention(s) within BR497

- 4.1.5 Roof gable (insulated on slope).
- 2.5 Boundary conditions.

### Step 3: Prepare geometry in DXF format: E13_Pitched_Roof_Gable_Insulation_at_Rafter.dxf

See section 2.1 in this document.

Note: According to BR497, Section 3.1.3.1, if a repeating thermal bridge is located within half of its normal spacing from the junction in the flanking element, it should be included in the model.
All other repeating thermal bridges in the flanking element should be excluded from both the model and the determination of the flanking element U-value. Therefore, in this example, the second timber member away from the corner junction is not included in the model.
For more information on this procedure, we recommend reviewing Method 2 in document B15 on the Physibel Knowledge Base.

### Step 4: Define material properties and boundary conditions

- Boundary conditions, surface heat transfer coefficients (as per section 2.5 of BR497).

Colours

| Col. | | Type | Subtype | Physical flow dir. | Geometrical flow dir. | Name | ε1 / ε2 [- / -] | λ [W/mK] | ε [-] | θ [°C] | h [W/m²K] | q [W/m²] | θa [°C] | hc [W/m²K] | Pc [W] | θr [°C] | Standard |
|---|---|---|---|---|---|---|---|---|---|---|---|---|---|---|---|---|---|
| 15 | | MATERIAL | | | | softwood 500 kg/m3 | | 0.130 | | | | | | | | | |
| 131 | | MATERIAL | | | | insulation 0.040 W/mK | | 0.040 | | | | | | | | | |
| 132 | | MATERIAL | | | | masonry light | | 0.220 | | | | | | | | | |
| 133 | | MATERIAL | | | | insulation 0.030 W/mK | | 0.030 | | | | | | | | | |
| 148 | | MATERIAL | | | | masonry medium density | | 0.320 | | | | | | | | | |
| 151 | | MATERIAL | | | | insulation 0.035 W/mK | | 0.035 | | | | | | | | | |
| 161 | | MATERIAL | | | | gypsum plasterboard | | 0.250 | | | | | | | | | |
| 170 | | BC_SIMPL | HE | | | exterior | | | | 0.0 | 25.00 | 0 | | | | | EN6946 |
| 174 | | BC_SIMPL | HI | HOR | | interior (normal) horizontal heat flow | | | | 20.0 | 7.70 | 0 | | | | | EN6946 |
| 190 | | BC_SIMPL | HI | UP | | indoors; upwards heat flow | | | | 20.0 | 10.00 | 0 | | | | | EN6946 |
| 240 | | EQUIMAT | LAYER | HOR | X | | 0.90 / 0.90 | 0.088 | | | | | | | | | EN6946 |
| 243 | | EQUIMAT | LAYER | UP | Z | | 0.90 / 0.90 | 0.151 | | | | | | | | | EN6946 |

**Figure 68: Materials and boundary condition properties for analysis**

### Step 5: Define the 1D U-value and areas of flanking elements

- The areas of flanking elements is the internal dimensions (as per 2.2.2 of BR497).
  *Edit → Areas.*
- 1D Values are defined at the edges of flanking elements, and the required minimum length of wall and floor in the model as per 2.2.2 of BR497.
  *Edit → U Values.*
  Since the second timber member is not included in the model there is no need for 2D U-value calculation and enforced U-value to the system.

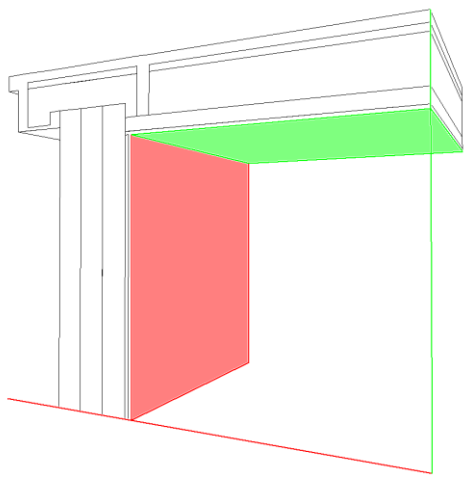

Areas

| No. | Xmin | Xmax | Ymin | Ymax | Zmin | Zmax | A [m²] |
|---|---|---|---|---|---|---|---|
| 1 | 10 | 10 | 0 | 1 | 0 | 2 | 0.999 |
| 2 | 10 | 13 | 0 | 1 | 2 | 2 | 1 |
| 3 | 0 | 0 | 0 | 0 | 0 | 0 | 0 |

U Values

| No. | Xmin | Xmax | Ymin | Ymax | Zmin | Zmax | U [W/m²K] | Enforced U [W/m²K] |
|---|---|---|---|---|---|---|---|---|
| 1 | 1 | 13 | 0 | 0 | 0 | 0 | 0.223 | |
| 2 | 13 | 13 | 0 | 0 | 0 | 9 | 0.162 | |
| 3 | 0 | 0 | 0 | 0 | 0 | 0 | 0.000 | |

**Figure 69: Areas and 1D U-values of flanking element for analysis**

### Step 6: Define derived thermal properties and run the calculation

- Choose the output required to calculate from the analysis (Ψ-value / temperature factor ($f_{Rsi}$)).
  *Edit → Derived Thermal Properties…*

- Prepare the grid for analysis using 'Auto split' and then run the calculation.
  *Grid → Auto split…* (see section 2.2 for parameters)

**Note, as per BR497:**

- The length of the wall above and below the slab is 1000mm or 3 times the thickness of wall; whichever is greater.
- The indoor boundary conditions are defined with 2 colour types: horizontal (174) and upward heat flow (190) (see Figure 67).

**Calculated Result from the analysis:**

Linear thermal transmittance (Ψ) from software = 0.056 W/mK

$$\Psi = \frac{\Phi}{(Ti - Te)} - U1 \times A1 - U2 \times A2 = \frac{8.821}{(20 - 0)} - 0.223 \times 1 - 0.162 \times 1 = 0.056 \text{ W/mK}$$

Temperature factor ($f_{R_{si}}$)= 0.916 (Check section 2.5 for critical temperature factors $f_c$)

**Default Ψ (as per SAP version 10.2)**

Gable (insulation at ceiling level) = 0.25 W/m·K

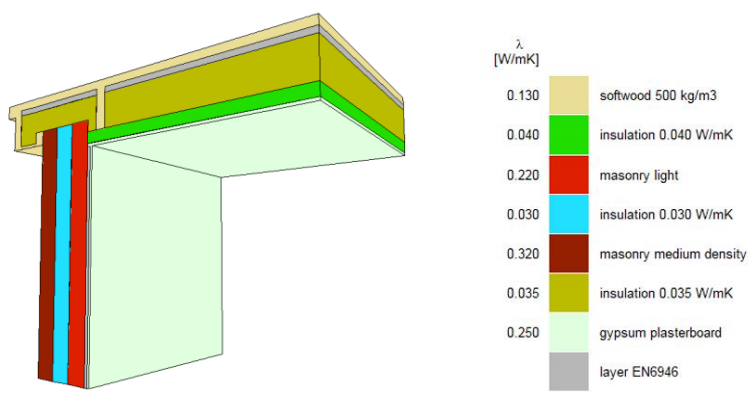


**Figure 70: Material properties**

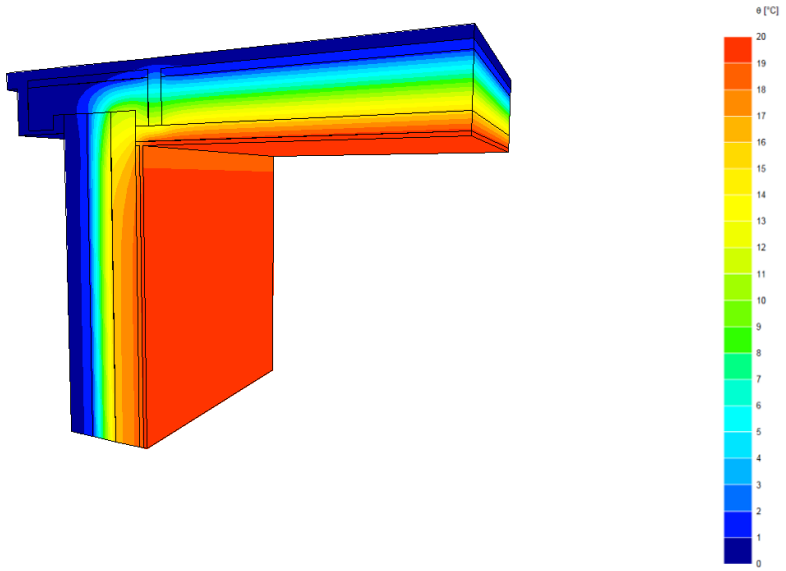


**Figure 71: Isotherms**

## 15. E16 – Normal wall corner

E16_NORMAL_WALL_CORNER.trc

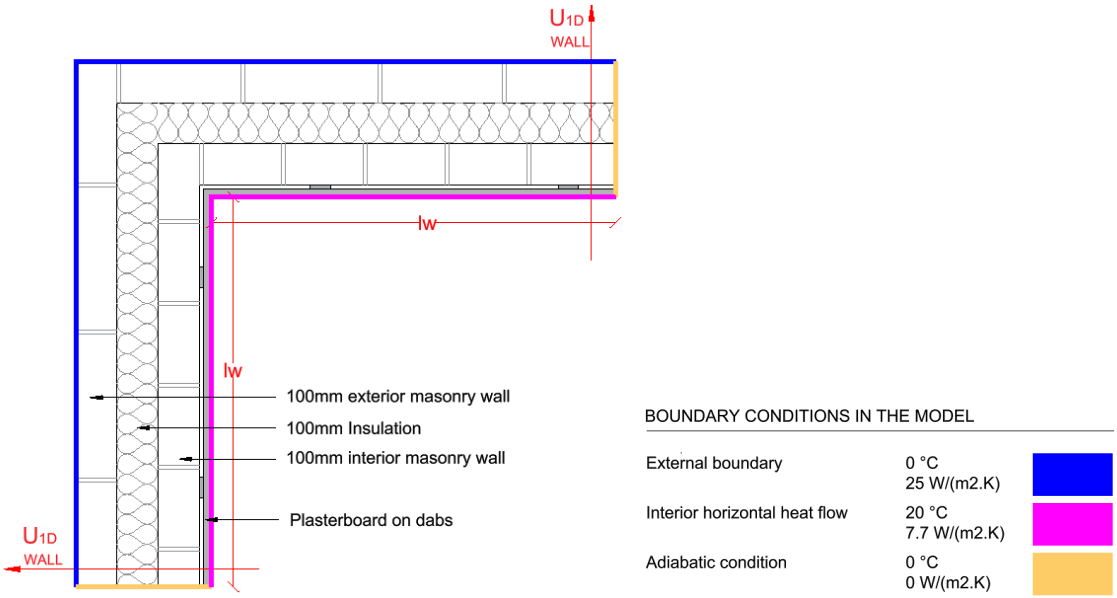


**Figure 72: normal wall corner – Junction E16**

### Step 1: Identify junction type

Corner (normal)

### Step 2: Refer to appropriate convention(s) within BR497

- 4.4.1 Corner (normal)

### Step 3: Prepare geometry in DXF format: E16_NORMAL_WALL_CORNER.dxf

See section 2.1 in this document.

Note: In section 2.1, the XZ orientation is recommended, as this is the most suitable choice for the majority of the examples in this document, which are vertical sections. The present example, however, is a horizontal section. Therefore, using the XY orientation makes manipulating and rotating the model in TRISCO more intuitive. This choice is purely for convenience and has no impact on the calculation results.

### Step 4: Define material properties and boundary conditions

- Boundary conditions, surface heat transfer coefficients (as per section 2.5 of BR497)

Colours

| Col. | | Type | Subtype | Physical flow dir. | Geometrical flow dir. | Name | ε1 / ε2 [- / -] | λ [W/mK] | ε [-] | θ [°C] | h [W/m²K] | q [W/m²] | θa [°C] | hc [W/m²K] | Pc [W] | θr [°C] | Standard |
|---|---|---|---|---|---|---|---|---|---|---|---|---|---|---|---|---|---|
| 132 | | MATERIAL | | | | masonry light | | 0.220 | | | | | | | | | |
| 133 | | MATERIAL | | | | insulation 0.030 W/mK | | 0.030 | | | | | | | | | |
| 148 | | MATERIAL | | | | masonry medium density | | 0.320 | | | | | | | | | |
| 161 | | MATERIAL | | | | gypsum plasterboard | | 0.250 | | | | | | | | | |
| 170 | | BC_SIMPL | HE | | | exterior | | | | 0.0 | 25.00 | 0 | | | | | EN6946 |
| 174 | | BC_SIMPL | HI | HOR | | interior (normal) horizontal heat flow | | | | 20.0 | 7.70 | 0 | | | | | EN6946 |
| 240 | | EQUIMAT | LAYER | HOR | X | | 0.90 / 0.90 | 0.067 | | | | | | | | | EN6946 |
| 241 | | EQUIMAT | LAYER | HOR | Y | | 0.90 / 0.90 | 0.067 | | | | | | | | | EN6946 |

**Figure 73: Materials and boundary condition properties for analysis**

**Step 5: Define the 1D U-value and areas of flanking elements**

- The areas of flanking elements is the internal dimensions (as per 2.2.2 of BR497)
  *Edit → Areas.*
- 1D Values are defined at the edges of flanking elements, and the required minimum length of wall and floor in the model as per 2.2.2 of BR497.
  *Edit → U Values.*

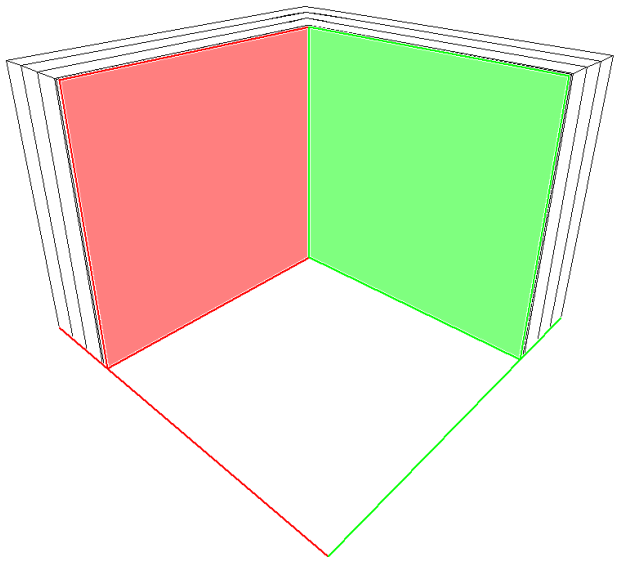

Areas

| No. | Xmin | Xmax | Ymin | Ymax | Zmin | Zmax | A [m²] |
|---|---|---|---|---|---|---|---|
| 1 | 6 | 6 | 0 | 5 | 0 | 1 | 0.999 |
| 2 | 6 | 11 | 5 | 5 | 0 | 1 | 0.999 |
| 3 | 0 | 0 | 0 | 0 | 0 | 0 | 0 |

U Values

| No. | Xmin | Xmax | Ymin | Ymax | Zmin | Zmax | U [W/m²K] | Enforced U [W/m²K] |
|---|---|---|---|---|---|---|---|---|
| 1 | 1 | 11 | 0 | 0 | 0 | 0 | 0.222 | |
| 2 | 11 | 11 | 0 | 10 | 0 | 0 | 0.222 | |
| 3 | 0 | 0 | 0 | 0 | 0 | 0 | 0.000 | |

**Figure 74: Areas and 1D U-values of flanking element for analysis**

**Step 6: Define derived thermal properties and run the calculation**

- Choose the output required to calculate from the analysis (Ψ-value / temperature factor ($f_{Rsi}$)).
  *Edit → Derived Thermal Properties…*
- Prepare the grid for analysis using 'Auto split' and then run the calculation.
  *Grid → Auto split…* (see section 2.2 for parameters)

**Note, as per BR497:**

- The length of the flanking element of the wall is 1000mm or 3 times the thickness of wall; whichever is greater.
- In case of a ventilated facade, the U value of the wall is calculated from the indoor environment till the ventilated cavity layer.

**Calculated Result from the analysis:**

Linear thermal transmittance (Ψ) from software = 0.051 W/mK

$$\Psi = \frac{\Phi}{(Ti - Te)} - U1 \times A1 - U2 \times A2 = \frac{9.919}{(20 - 0)} - 0.222 \times 1 - 0.222 \times 1 = 0.051\ W/mK$$

Temperature factor ($f_{R_{si}}$)= 0.920 (Check section 2.5 for critical temperature factors $f_c$)

**Default Ψ (as per SAP version 10.2)**

Corner (normal) = 0.18 W/mK

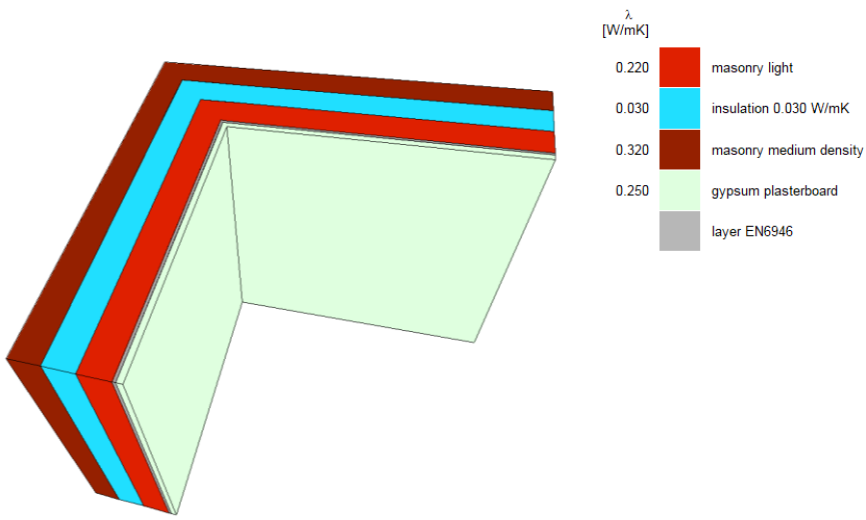


**Figure 75: Material properties**

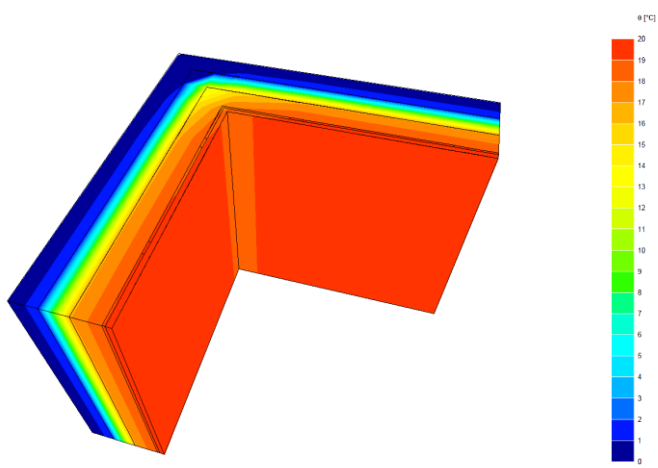

**Figure 76: Isotherms**

## 16. E17 – Inverted wall corner

E17_INVERTED_WALL_CORNER.trc

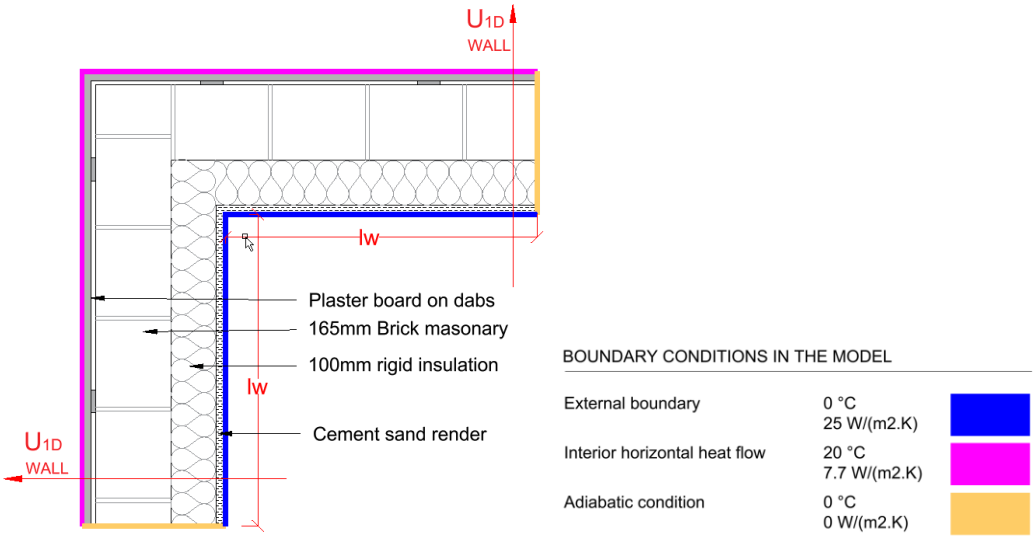


**Figure 77: Inverted wall corner – Junction E17**

### Step 1: Identify junction type

- Corner (inverted – internal area greater than external area)

### Step 2: Refer to appropriate convention(s) within BR497

- 4.4.2 Corner (inverted)
- 2.5 Boundary conditions

### Step 3: Prepare geometry in DXF format: E17_INVERTED_WALL_CORNER.dxf

See section 2.1 in this document.

> Note: In section 2.1, the XZ orientation is recommended, as this is the most suitable choice for the majority of the examples in this document, which are vertical sections. The present example, however, is a horizontal section. Therefore, using the XY orientation makes manipulating and rotating the model in TRISCO more intuitive. This choice is purely for convenience and has no impact on the calculation results.

### Step 4: Define material properties and boundary conditions

- Boundary conditions, surface heat transfer coefficients (as per section 2.5 of BR497)

Colours

| Col. | | Type | Subtype | Physical flow dir. | Geometrical flow dir. | Name | ε1 / ε2 [- / -] | λ [W/mK] | ε [-] | θ [°C] | h [W/m²K] | q [W/m²] | θa [°C] | hc [W/m²K] | Pc [W] | θr [°C] | Standard |
|---|---|---|---|---|---|---|---|---|---|---|---|---|---|---|---|---|---|
| 57 | | MATERIAL | | | | cement sand render | | 1.000 | | | | | | | | | |
| 133 | | MATERIAL | | | | insulation 0.030 W/mK | | 0.030 | | | | | | | | | |
| 148 | | MATERIAL | | | | masonry medium density | | 0.320 | | | | | | | | | |
| 161 | | MATERIAL | | | | gypsum plasterboard | | 0.250 | | | | | | | | | |
| 170 | | BC_SIMPL | HE | | | exterior | | | | 0.0 | 25.00 | 0 | | | | | EN6946 |
| 174 | | BC_SIMPL | HI | HOR | | interior (normal) horizontal heat flow | | | | 20.0 | 7.70 | 0 | | | | | EN6946 |
| 240 | | EQUIMAT | LAYER | HOR | X | | 0.90 / 0.90 | 0.067 | | | | | | | | | EN6946 |
| 243 | | EQUIMAT | LAYER | HOR | Y | | 0.90 / 0.90 | 0.067 | | | | | | | | | EN6946 |

**Figure 78: Materials and boundary condition properties for analysis**

**Step 5: Define the 1D U-value and areas of flanking elements**

- The areas of flanking elements are the internal dimensions (as per 2.2.2 of BR497).
  *Edit → Areas.*
- 1D Values are defined at the edges of flanking elements, and the required minimum length of wall and floor in the model as per 2.2.2; BR497.
  *Edit → U Values.*

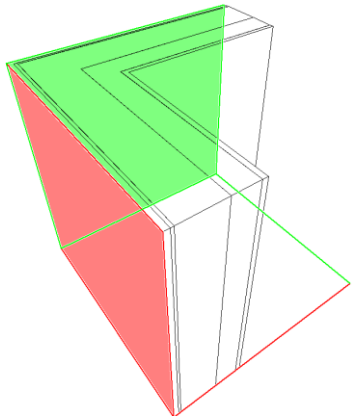

Areas

| No. | Xmin | Xmax | Ymin | Ymax | Zmin | Zmax | A [m²] |
|---|---|---|---|---|---|---|---|
| 1 | 1 | 1 | 0 | 81 | 0 | 1 | 1 |
| 2 | 1 | 82 | 81 | 81 | 0 | 1 | 1 |
| 3 | 0 | 0 | 0 | 0 | 0 | 0 | 0 |

U Values

| No. | Xmin | Xmax | Ymin | Ymax | Zmin | Zmax | U [W/m²K] | Enforced U [W/m²K] |
|---|---|---|---|---|---|---|---|---|
| 1 | 1 | 82 | 0 | 0 | 0 | 0 | 0.235 | |
| 2 | 82 | 82 | 0 | 81 | 0 | 0 | 0.235 | |
| 3 | 0 | 0 | 0 | 0 | 0 | 0 | 0.000 | |

**Figure 79: Areas and 1D U-values of flanking element for analysis**

**Step 6: Define derived thermal properties and run the calculation**

- Choose the output required to calculate from the analysis (Ψ-value / temperature factor ($f_{Rsi}$)).
  *Edit → Derived Thermal Properties…*
- Prepare the grid for analysis using 'Auto split' and then run the calculation.
  *Grid → Auto split…* (see section 2.2 for parameters)

**Note, as per BR497:**

- The length of the flanking element of the wall is 1000mm or 3 times the thickness of wall, whichever is greater.
- In case of a ventilated facade, the U value of the wall is calculated from the indoor boundary till the ventilated cavity layer.
- If there are no constructional aspects to the thermal bridging at a corner junction (which is usually the case when the insulation layer is continuous around the inverted corner) the Ψ value for the inverted corner will have a lower Ψ-value than that for the corresponding normal corner, and indeed it can be negative.

**Calculated Result from the analysis:**

Linear thermal transmittance (Ψ) from software = - 0.119 W/mK

$$\Psi = \frac{\Phi}{(Ti - Te)} - U1 \times A1 - U2 \times A2 = \frac{7.018}{(20 - 0)} - 0.235 \times 1 - 0.235 \times 1 = -0.119 \text{ W/mK}$$

Temperature factor ($f_{R_{si}}$)= 0.970 (Check section 2.5 for critical temperature factors $f_c$)

**Default Ψ (as per SAP version 10.2)**

Corner (inverted – internal area greater than external area) = 0 W/mK

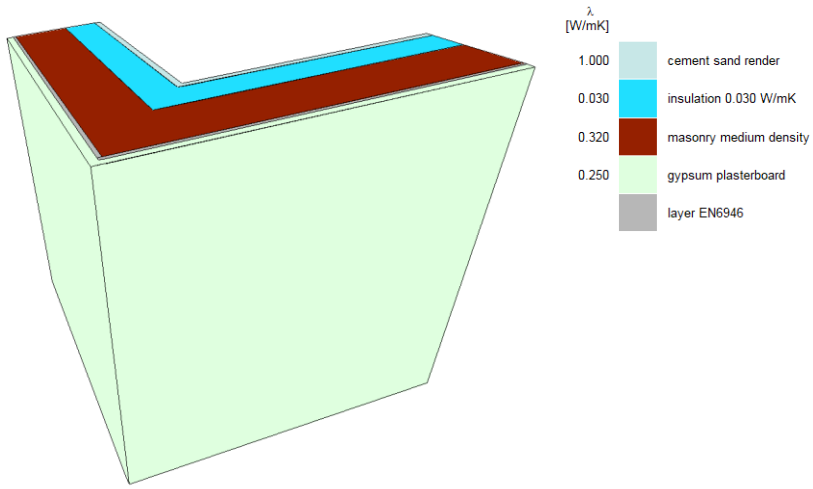


**Figure 80 Material properties**

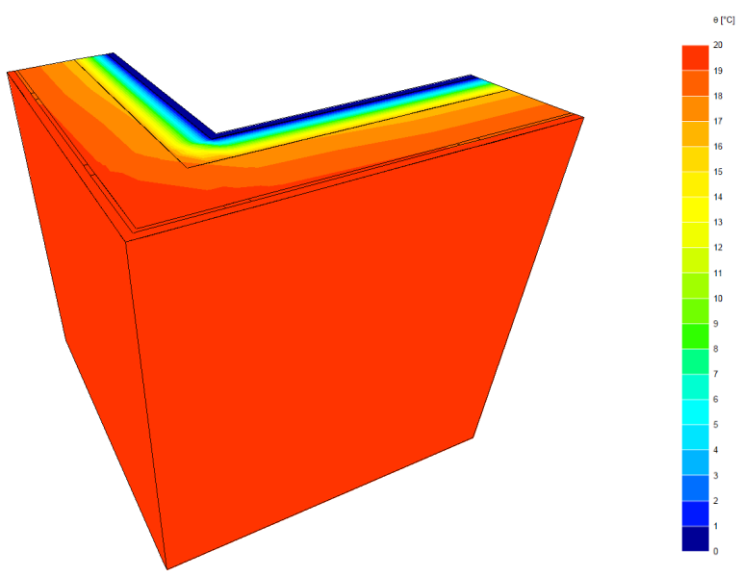


**Figure 81: Isotherms**

## 17. E18 – Party wall between dwellings

E18_PARTY_WALL_BETWEEN_DWELLINGS.trc

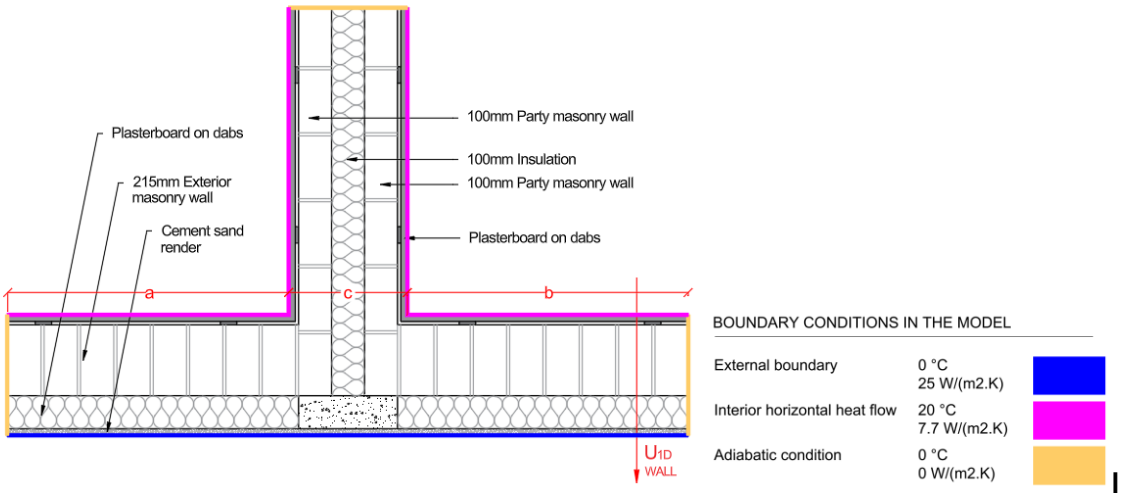


**Figure 82: Party wall between dwelling – Junction E18**

### Step 1: Identify junction type

- Party wall between dwellings

### Step 2: Refer to appropriate convention(s) within BR497

- 4.5.3 Partition/party wall
- 2.5 Boundary conditions

### Step 3: Prepare geometry in DXF format: E18_PARTY_WALL_BETWEEN_DWELLINGS.dxf

See section 2.1 in this document.

> Note: In section 2.1, the XZ orientation is recommended, as this is the most suitable choice for the majority of the examples in this document, which are vertical sections. The present example, however, is a horizontal section. Therefore, using the XY orientation makes manipulating and rotating the model in TRISCO more intuitive. This choice is purely for convenience and has no impact on the calculation results.

### Step 4: Define material properties and boundary conditions

- Boundary conditions, surface heat transfer coefficients (as per section 2.5 of BR497)

Colours

| Col. | | Type | Subtype | Physical flow dir. | Geometrical flow dir. | Name | ε1 / ε2 [- / -] | λ [W/mK] | ε [-] | θ [°C] | h [W/m²K] | q [W/m²] | θa [°C] | hc [W/m²K] | Pc [W] | θr [°C] | Standard |
|---|---|---|---|---|---|---|---|---|---|---|---|---|---|---|---|---|---|
| 57 | | MATERIAL | | | | cement sand render | | 1.000 | | | | | | | | | |
| 133 | | MATERIAL | | | | insulation 0.030 W/mK | | 0.030 | | | | | | | | | |
| 148 | | MATERIAL | | | | masonry medium density | | 0.320 | | | | | | | | | |
| 151 | | MATERIAL | | | | insulation 0.035 W/mK | | 0.035 | | | | | | | | | |
| 161 | | MATERIAL | | | | gypsum plasterboard | | 0.250 | | | | | | | | | |
| 170 | | BC_SIMPL | HE | | | exterior | | | | 0.0 | 25.00 | 0 | | | | | EN6946 |
| 174 | | BC_SIMPL | HI | HOR | | interior (normal) horizontal heat flow | | | | 20.0 | 7.70 | 0 | | | | | EN6946 |
| 241 | | EQUIMAT | LAYER | HOR | X | | 0.90 / 0.90 | 0.071 | | | | | | | | | EN6946 |
| 242 | | EQUIMAT | LAYER | HOR | X | | 0.90 / 0.90 | 0.071 | | | | | | | | | EN6946 |
| 244 | | EQUIMAT | LAYER | HOR | Y | | 0.90 / 0.90 | 0.071 | | | | | | | | | EN6946 |
| 245 | | EQUIMAT | LAYER | HOR | Y | | 0.90 / 0.90 | 0.071 | | | | | | | | | EN6946 |

**Figure 83: Materials and boundary condition properties for analysis**

**Step 5: Define the 1D U-value and areas of flanking elements**

- The areas of flanking elements are the internal dimensions (as per 2.2.2 of BR497).
  *Edit → Areas.*
- 1D Values are defined at the edges of flanking elements, and the required minimum length of wall and floor in the model as per 2.2.2 of BR497.
  *Edit → U Values.*

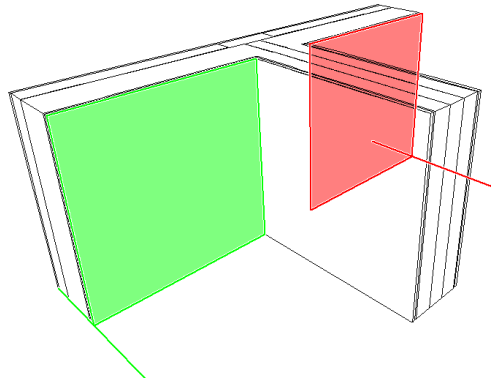

Areas

| No. | Xmin | Xmax | Ymin | Ymax | Zmin | Zmax | A [m²] |
|---|---|---|---|---|---|---|---|
| 1 | 0 | 39 | 24 | 24 | 0 | 1 | 1 |
| 2 | 69 | 108 | 24 | 24 | 0 | 1 | 1 |
| 3 | 0 | 0 | 0 | 0 | 0 | 0 | 0 |

U Values

| No. | Xmin | Xmax | Ymin | Ymax | Zmin | Zmax | U [W/m²K] | Enforced U [W/m²K] |
|---|---|---|---|---|---|---|---|---|
| 1 | 0 | 0 | 1 | 65 | 0 | 0 | 0.226 | |
| 2 | 108 | 108 | 1 | 65 | 0 | 0 | 0.226 | |
| 3 | 0 | 0 | 0 | 0 | 0 | 0 | 0.000 | |

**Figure 84: Areas and 1D U-values of flanking element for analysis**

**Step 6: Define derived thermal properties and run the calculation**

- Choose the output required to calculate from the analysis (Ψ-value / temperature factor ($f_{Rsi}$)).
  *Edit → Derived Thermal Properties…*
- Prepare the grid for analysis using 'Auto split' and then run the calculation.
  *Grid → Auto split…* (see section 2.2 for parameters)

**Note, as per BR497:**

- The length of the flanking element of the wall is 1000mm or 3 times the thickness of the wall, whichever is greater.
- For internal partitions within the same dwelling (or premises), the length lw over which the U-value applies includes the thickness of the partition wall.
  lw = a + b + c
- For a party wall between dwellings (or premises), the length lw over which the U-value of the wall applies doesn't include the thickness of the party wall.
  lw = a + b with half of Ψ allocated to each dwelling (or premises).

**Calculated Result from the analysis:**

Linear thermal transmittance (Ψ) from software = 0.079 W/mK

$$\Psi = \frac{\Phi}{(Ti - Te)} - U1 \times A1 - U2 \times A2 = \frac{10.635}{(20 - 0)} - 0.226 \times 1 - 0.226 \times 1 = 0.079\ W/mK$$

Linear thermal transmittance for the junction (between 2 dwellings) = Ψ/2 = 0.04 W/mK

Temperature factor ($f_{R_{si}}$)= 0.956 (Check section 2.5 for critical temperature factors $f_c$)

**Default Ψ (as per SAP version 10.2)**

Party wall between dwellings = 0.24 W/mK

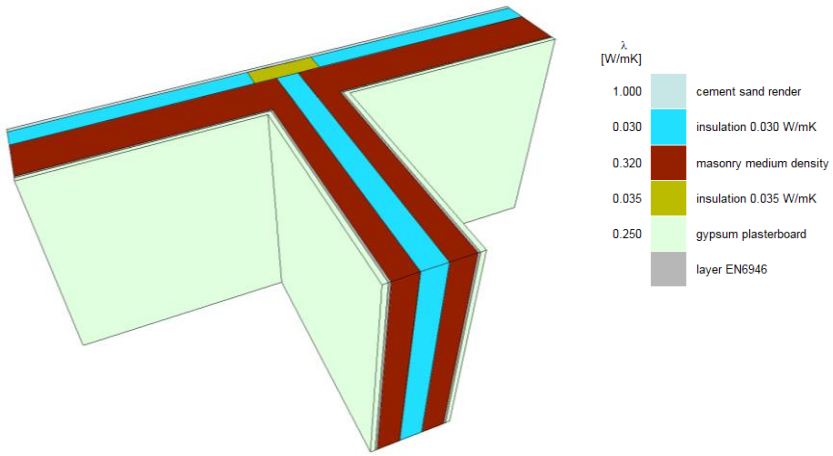


**Figure 85: Material properties**

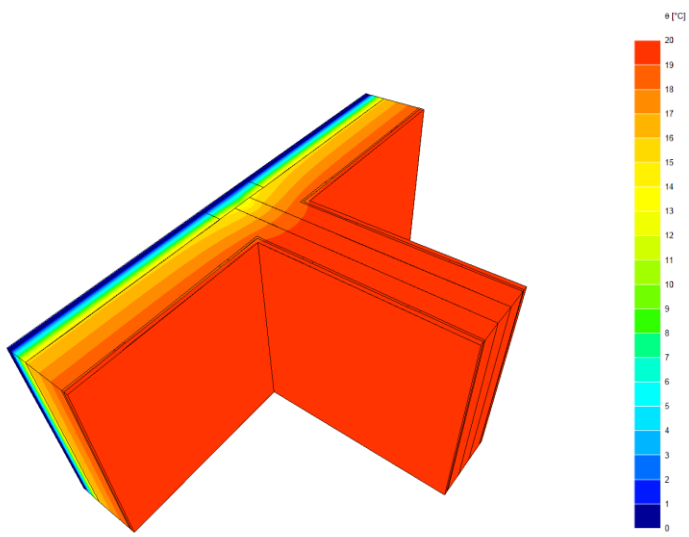


**Figure 86: Isotherms**

## 18. P1a - Party wall/ground-floor junction (slab on the ground)

P1A_br497_model(i).trc
P1A_br497_model(ii).trc

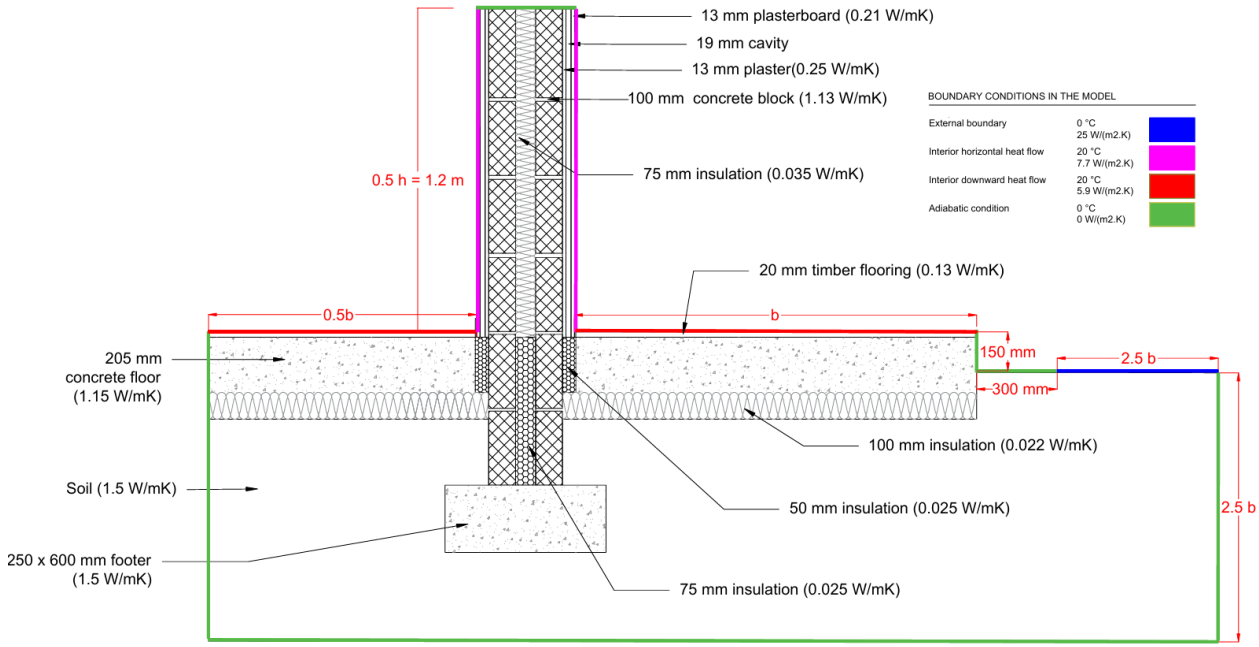


**Figure 87 Materials and boundary conditions of model (i)**

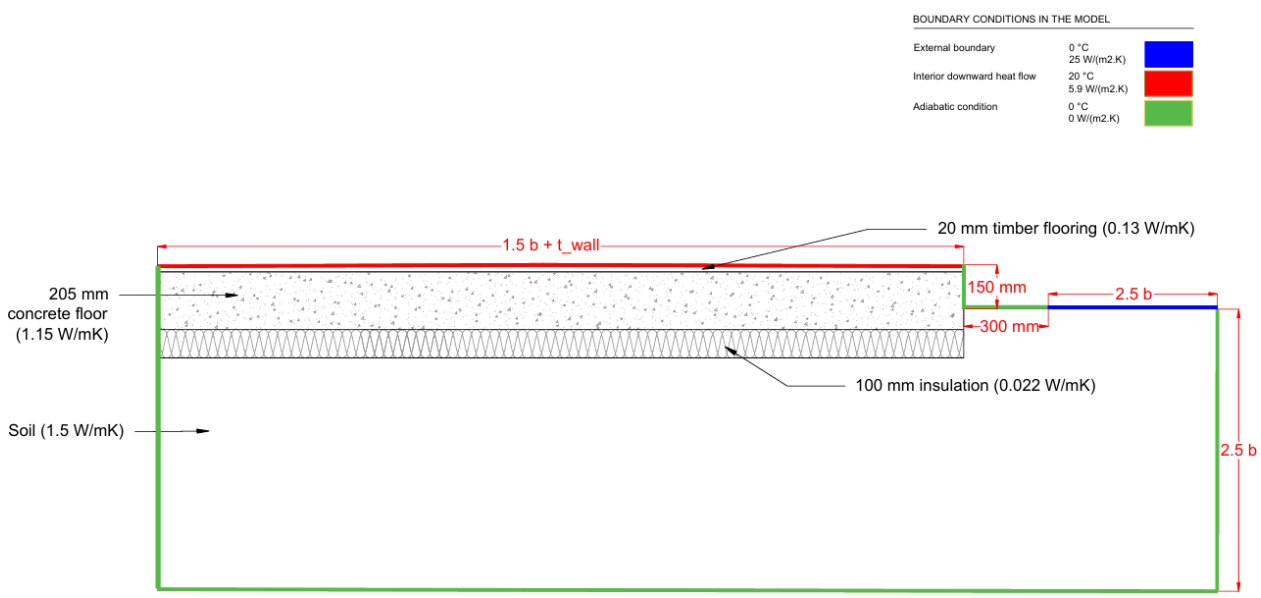


**Figure 88 Materials and boundary conditions of model (ii)**

### Step 1: Identify junction type

- P1 – Party wall/ground floor – between dwellings

**Step 2: Refer to the appropriate conventions within BR497**

- 4.8.1 Party wall/ground-floor junction
- 2.5 Boundary conditions

BR497 Section 4.8.1 requires two models to be simulated. First, the floor with the separating wall giving the modelled heat loss $Q_1^{3D}$ , and secondly the floor without the separating wall giving the modelled heat loss $Q_2^{3D}$. Step 3 to 6 explains how to model the floor with separating wall and step 6 to 8 explains how to model the floor without the party wall.

**Step 3: Prepare geometry of model (i) in DXF format:** P1A_br497_model(i).dxf

See section 2.1 and section 7, step 3 in this document.

As illustrated in the Figure 87, the floor on the left side of the party wall has a length of 0.5b, while the floor on the right side extends b in length. Adjacent to the floor, a 300 mm horizontally adiabatic zone is defined. Beyond this zone, the ground is modelled to extend 2.5b horizontally from the adiabatic boundary and 2.5b vertically from the ground level.

This junction is modelled in 3D. Along the y-axis, the model consists of a 0.5b wall, a 300 mm adiabatic zone, and a 2.5b-long ground section. Because the wall/ground model is extruded 4 m in the y-direction, the DXF geometry is created in the XZ plane, while the required modifications along the y-axis are made directly in TRISCO. The following paragraphs explain these modelling steps in more detail.

Importing the full 2.5b ground section directly in TriscoDXF can result in the loss of important floor and wall details. Capturing these details accurately requires a much finer pixel resolution, which significantly increases the computational effort. A more efficient workflow is therefore to model only 0.5b ground section in the DXF file and subsequently extend it in TRISCO to the required 2.5b length. For this example, the recommended TriscoDXF pixel resolution is 1.

When importing the DXF file, use the settings shown in Figure 1, but change the Object depth from 1 m to 4 m. After importing the geometry with this setting, the model will appear as shown in Figure 89.

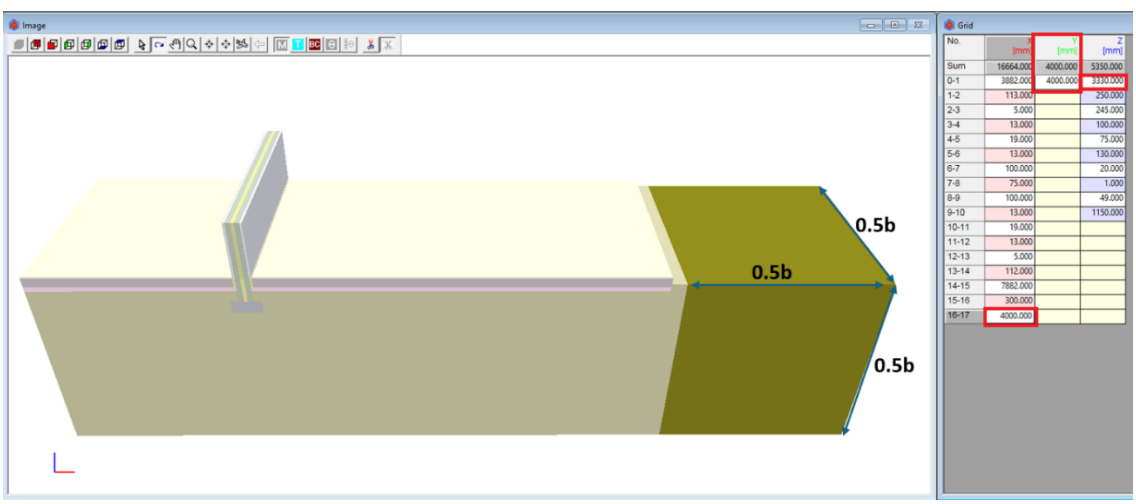


**Figure 89 DXF Dimensions and first import of the model (i)**

To align the modelling approach with the methodology described in Section 4.8.1 of BR497, several modifications are required. First, the x- and z-axes should be extended by 2b (16 m). This can be achieved by adjusting the grid values accordingly. Next, two new grid meshes should be added along the y-axis, with dimensions of 300 mm and 20 000 mm, respectively.

Following these changes, the block sequence and numbering must be updated to correctly represent the soil (ground) and appropriate external and adiabatic boundary conditions in the newly added grid blocks.

Figure 90 illustrates the final model that is used for the calculations and Figure 91 presents the blocks arrangement.

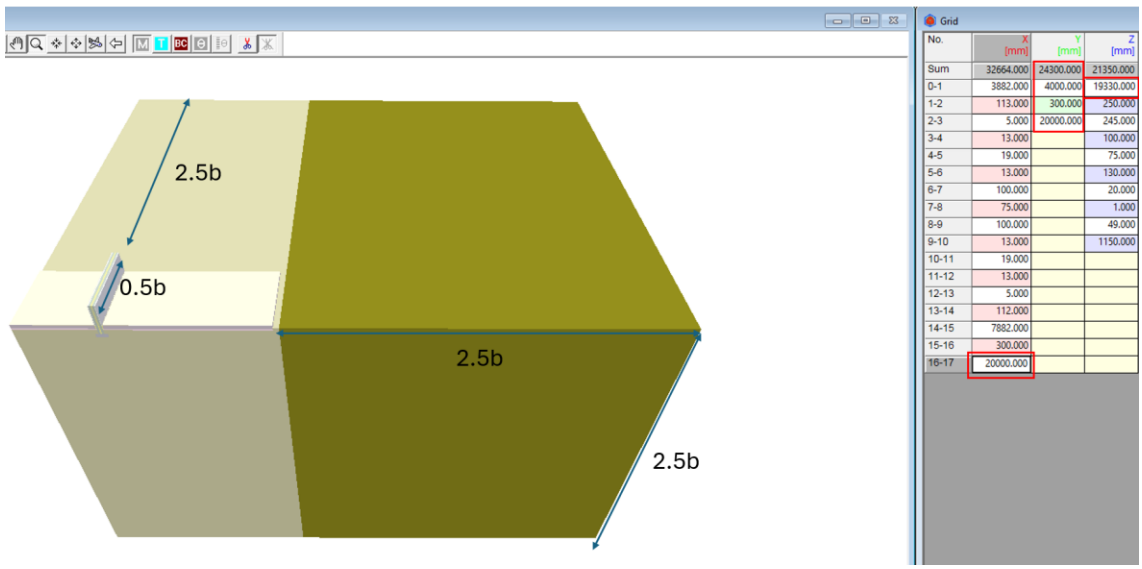


| No. | X [mm] | Y [mm] | Z [mm] |
|---|---|---|---|
| Sum | 32664.000 | 24300.000 | 21350.000 |
| 0-1 | 3882.000 | 4000.000 | 19330.000 |
| 1-2 | 113.000 | 300.000 | 250.000 |
| 2-3 | 5.000 | 20000.000 | 245.000 |
| 3-4 | 13.000 | | 100.000 |
| 4-5 | 19.000 | | 75.000 |
| 5-6 | 13.000 | | 130.000 |
| 6-7 | 100.000 | | 20.000 |
| 7-8 | 75.000 | | 1.000 |
| 8-9 | 100.000 | | 49.000 |
| 9-10 | 13.000 | | 1150.000 |
| 10-11 | 19.000 | | |
| 11-12 | 13.000 | | |
| 12-13 | 5.000 | | |
| 13-14 | 112.000 | | |
| 14-15 | 7882.000 | | |
| 15-16 | 300.000 | | |
| 16-17 | 20000.000 | | |

**Figure 90 Model (i) dimensions for the calculation model**

Blocks

| No. | | Col. | Xmin | Xmax | Ymin | Ymax | Zmin | Zmax |
|---|---|---|---|---|---|---|---|---|
| 1 | | 31 | 0 | 17 | 0 | 3 | 0 | 5 |
| 2 | | 170 | 0 | 17 | 0 | 3 | 5 | 10 |
| 3 | | 135 | 7 | 8 | 0 | 1 | 2 | 6 |
| 4 | | 135 | 2 | 6 | 0 | 1 | 4 | 6 |
| 5 | | 135 | 9 | 13 | 0 | 1 | 4 | 6 |
| 6 | | 88 | 6 | 7 | 0 | 1 | 2 | 10 |
| 7 | | 88 | 8 | 9 | 0 | 1 | 2 | 10 |
| 8 | | 136 | 1 | 14 | 0 | 1 | 1 | 2 |
| 9 | | 118 | 0 | 6 | 0 | 1 | 3 | 4 |
| 10 | | 118 | 9 | 15 | 0 | 1 | 3 | 4 |
| 11 | | 15 | 0 | 3 | 0 | 1 | 6 | 9 |
| 12 | | 15 | 12 | 15 | 0 | 1 | 6 | 9 |
| 13 | | 174 | 0 | 2 | 0 | 1 | 8 | 10 |
| 14 | | 174 | 13 | 15 | 0 | 1 | 8 | 10 |
| 15 | | 174 | 2 | 3 | 0 | 1 | 9 | 10 |
| 16 | | 174 | 12 | 13 | 0 | 1 | 9 | 10 |
| 17 | | 145 | 3 | 4 | 0 | 1 | 6 | 10 |
| 18 | | 145 | 11 | 12 | 0 | 1 | 6 | 10 |
| 19 | | 72 | 0 | 2 | 0 | 1 | 4 | 6 |
| 20 | | 72 | 13 | 15 | 0 | 1 | 4 | 6 |
| 21 | | 161 | 5 | 6 | 0 | 1 | 6 | 10 |
| 22 | | 161 | 9 | 10 | 0 | 1 | 6 | 10 |
| 23 | | 241 | 4 | 5 | 0 | 1 | 6 | 10 |
| 24 | | 240 | 10 | 11 | 0 | 1 | 6 | 10 |
| 25 | | 151 | 7 | 8 | 0 | 1 | 6 | 10 |
| 26 | | 166 | 0 | 2 | 0 | 1 | 7 | 8 |
| 27 | | 166 | 13 | 15 | 0 | 1 | 7 | 8 |
| 28 | | 191 | 15 | 16 | 0 | 1 | 5 | 7 |
| 29 | | 191 | 0 | 16 | 1 | 2 | 5 | 10 |

**Figure 91 Blocks Arrangement for model (i)**

**Step 4: Define material properties and boundary conditions**

- For boundary conditions and surface heat transfer coefficients (as per section 2.5 of BR497)
- Some of the colours used in the model do not match the default values provided in the TRISCO Colour Database. These colours have been manually adjusted to match Worked Example 9 from BR497 (see red boxes in Figure 92 below).

Colours

| Col. | | Type | Subtype | Physical flow dir. | Geometrical flow dir. | Name | ε1 / ε2 [- / -] | λ [W/mK] | ε [-] | θ [°C] | h [W/m²K] | q [W/m²] | θa [°C] | hc [W/m²K] | Pc [W] | θr [°C] | Standard |
|---|---|---|---|---|---|---|---|---|---|---|---|---|---|---|---|---|---|
| 15 | | MATERIAL | | | | softwood 500 kg/m3 | | 0.130 | | | | | | | | | |
| 31 | | MATERIAL | | | | clay or silt | | 1.500 | | | | | | | | | |
| 72 | | MATERIAL | | | | concrete density 1800 kg/m3 | | 1.150 | | | | | | | | | |
| 88 | | MATERIAL | | | | concrete density 2000 kg/m3 | | 1.130 | | | | | | | | | |
| 118 | | MATERIAL | | | | insulation 0.022 W/mK | | 0.022 | | | | | | | | | |
| 135 | | MATERIAL | | | | insulation 0.025 W/mK | | 0.025 | | | | | | | | | |
| 136 | | MATERIAL | | | | reinforced concrete (steel 2%) | | 1.500 | | | | | | | | | |
| 145 | | MATERIAL | | | | gypsum 1200 kg/m3 | | 0.210 | | | | | | | | | |
| 151 | | MATERIAL | | | | insulation 0.035 W/mK | | 0.035 | | | | | | | | | |
| 161 | | MATERIAL | | | | gypsum plasterboard | | 0.250 | | | | | | | | | |
| 166 | | BC_SIMPL | HI | DOWN | | indoors downwards heat flow | | | | 20.0 | 5.90 | 0 | | | | | EN6946 |
| 170 | | BC_SIMPL | HE | | | exterior | | | | 0.0 | 25.00 | 0 | | | | | EN6946 |
| 174 | | BC_SIMPL | HI | HOR | | interior (normal) horizontal heat flow | | | | 20.0 | 7.70 | 0 | | | | | EN6946 |
| 191 | | BC_SIMPL | NIHIL | | | adiabatic | | | | 0.0 | 0.00 | 0 | | | | | NIHIL |
| 240 | | EQUIMAT | LAYER | HOR | X | | 0.90 / 0.90 | 0.105 | | | | | | | | | EN6946 |
| 241 | | EQUIMAT | LAYER | HOR | X | | 0.90 / 0.90 | 0.105 | | | | | | | | | EN6946 |

**Figure 92 Materials and boundary condition properties for analysis**

**Step 5: Define derived thermal properties and run the calculation**

- Prepare the grid for analysis using 'Auto split' and then run the calculation.
  *Grid → Auto split…* (see section 2.2 for parameters)

**Step 6: Prepare geometry of model (ii) in DXF format:** P1A_br497_model(ii).dxf

The modeling approach described in Step 3 is applied identically in Model (ii), but without party wall and foundation. The resulting grid dimensions and block numbers are shown in Figure 93 and Figure 94.

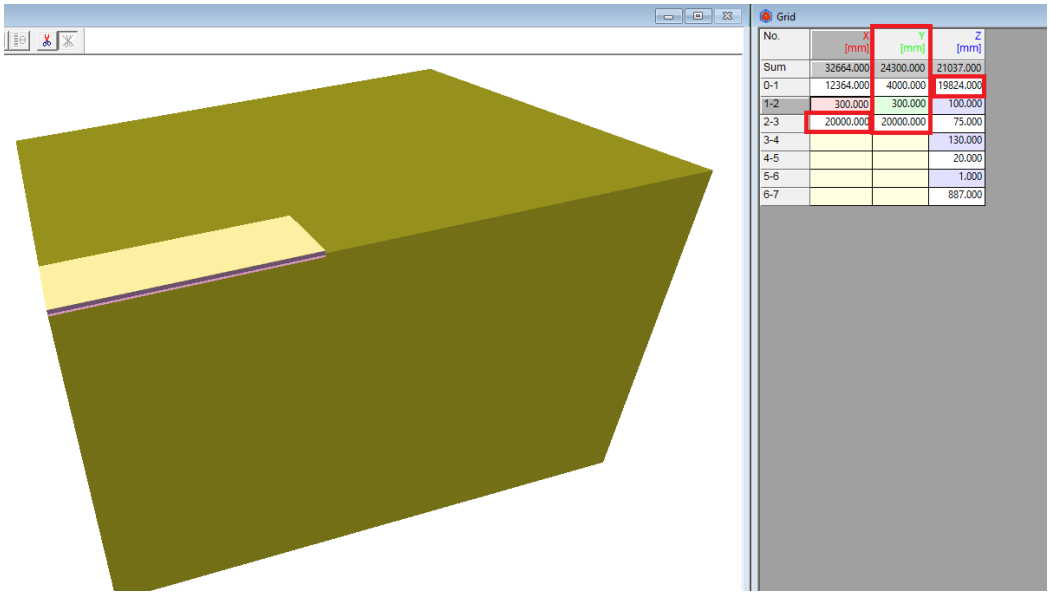


**Figure 93 Model (ii) dimensions for the calculation model**

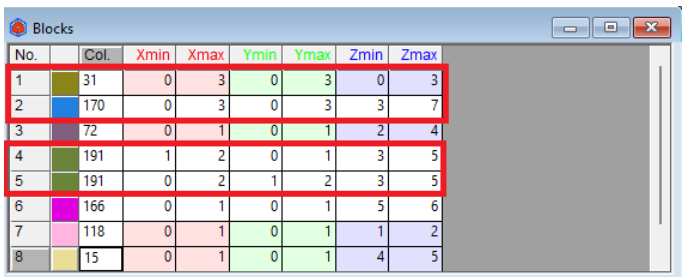


**Figure 94 Blocks Arrangement for model (ii)**

**Step 7: Define material properties and boundary conditions**

- Same as for step 4.

**Step 8: Define derived thermal properties and run the calculation**

- Same as for step 5.

**Calculated Result from the analysis:**

Linear thermal transmittance (ψ) = 0.099 W/mK

$$\psi = \psi_c + (t_{wall} \times U_f')$$

$$\psi_c = \frac{(Q_1^{3D} - Q_2^{3D})}{(T_i - T_e) \times \ell} = \frac{(233.006 - 223.745)}{(20-0) \times 4.0} = 0.116 \text{ W/mK}$$

where:

$Q_1^{3D}$ = total heat loss from the model(i) (W)

$Q_2^{3D}$ = total heat loss from the model(ii) (W)

$\ell$ = width of floor (in the model) parallel to the separating wall (m)

$$U_f' = \frac{Q_f}{(b+0.5b+t_{wall}) \times \ell \times (T_i - T_e)} = \frac{223.745}{(8+4+0.365) \times 4.0 \times (20-0)} = 0.226 \text{ W/m}^2\text{K}$$

where:

$U_f'$ = U-value of the heat-loss floor

$t_{wall}$ = thickness of the separating wall

$Q_f = Q_2^{3D}$, the heat flow into the heat-loss floor of the second 3D model, model (ii)

$\psi = \psi_c + (t_{wall} \times U_f') = 0.116 + (0.365 \times 0.226) = 0.198$ W/mK

Half of the calculated ψ-value is assigned to each property.

In the case of a separting wall within a property, ψ is equal to $\psi_c$ and the full calculated ψ-value is assigned to property.

**Default Ψ (as per SAP version 10.2):**

Ground floor (P1) = 0.32 W/mK

**Note, as per BR497:**

- The height of the party wall, $h_{pw}$ is taken to be 2.4 m. The height from the finished floor level to the adiabatic at the top of the separating wall in the model is ½$h_{pw}$, ie 1.2 m.
- The level of the external soil (in the model) should be set 150 mm below that of the internal floor finish.
- The characteristic dimensions of the floor (b) in the model should be set to 8 m, which corresponds to a P/A of 0.25 (section 2.2.2 of BR497). P/A are defined in EN ISO 13370.
- External walls are replaced by the adiabatic boundary (to avoid the ψ-value being dependent on the construction of external wall) at the edge of the floor which is verticall down from the finished floor level and then 300 mm horizontally at the level of the external soil, which itself 150 mm below the finished floor level.
- The results obtained in this document differ from those presented in Worked Example 9 of the BR497 document, despite using the same model, which suggests a potential error in BR497.
- BR497 recommends placing the adiabatic boundary (representing the external wall) at ground level. However, it can be argued that positioning it at the level of the wall insulation would provide a more realistic representation of the actual heat flow.
- Section 18.1 investigates the impact of two alternative models: one with the adiabatic condition extending to the floor insulation level, and another extending 1 m lower. Heat flux distributions are illustrated to demonstrate the dependency of the position of the the adiabatic condition.
- For clarity, the files in this section are labeled BR497, while those in the other section are labeled Physibel.

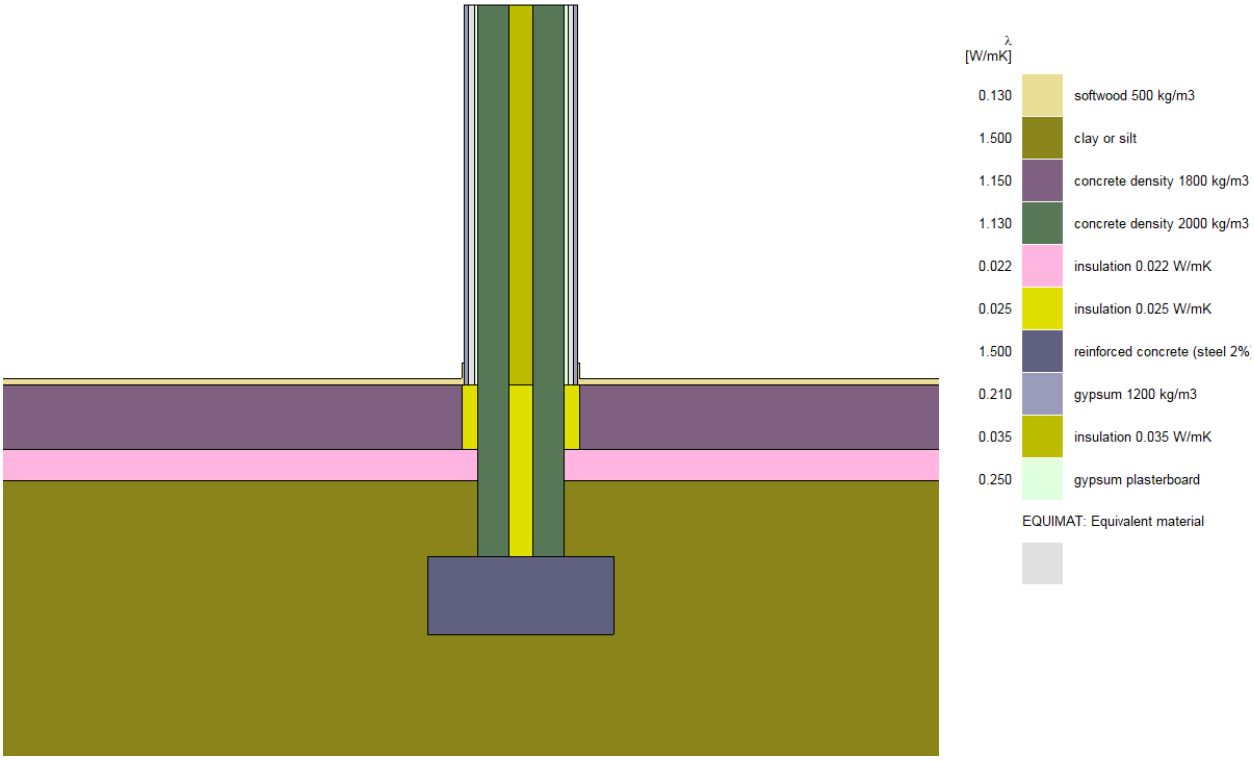


**Figure 95: Material properties**

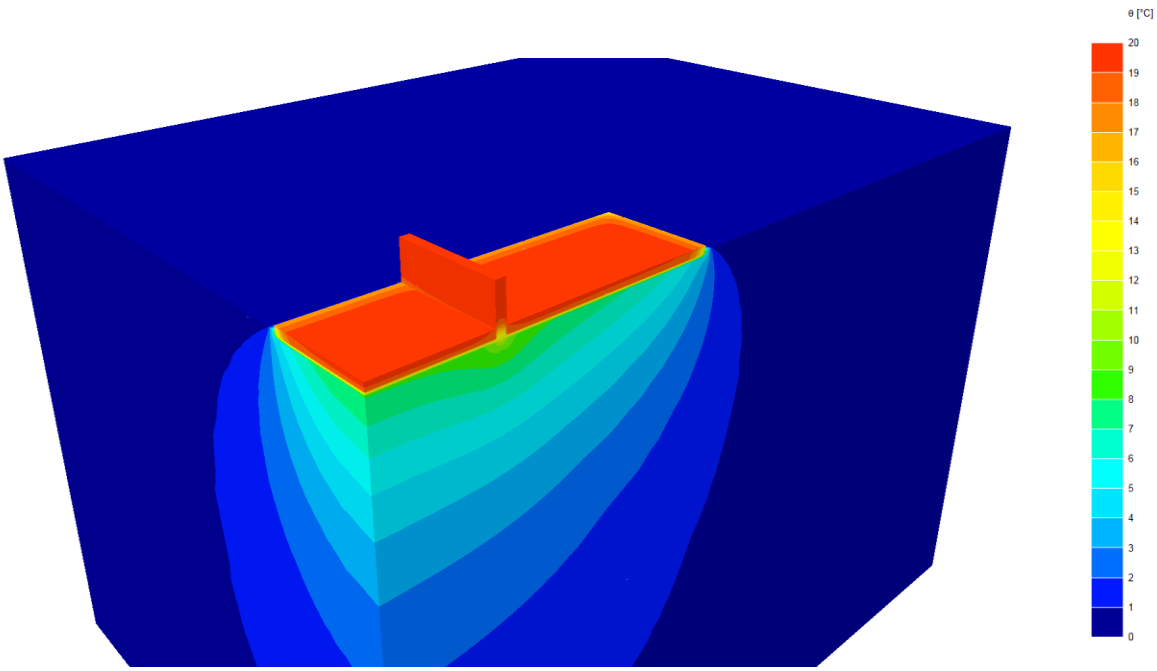


**Figure 96: Temperature contour from the analysis**

## 18.1. Annex A: Increasing the adiabatic boundary condition depth of external wall

In BR497 Section 4.8.1, the party wall/ground-floor junction is modelled by replacing the external walls with an adiabatic boundary condition. This prevents the calculated ψ-value from being influenced by the external wall construction. The adiabatic boundary is applied vertically from the floor level down to the soil, and horizontally for 300 mm. While this method is conservative, it may not reflect realistic thermal bridging effects.

To explore more representative modelling options, two alternative approaches are investigated:

- In part 1, adiabatic boundary condition applied vertically only to the level of the inner wall insulation;
- In part 2, adiabatic boundary condition applied vertically down to 1 meter below the inner wall insulation finish level.

All three models use identical material properties, boundary conditions, and calculation steps as described in section 18 . Therefore, only essential images are provided here to illustrate the differences in geometry and boundary placement.

### 18.1.1. Part 1: Adiabatic Condition at the level of party wall insulation

P1A_Physibel_model(i).trc

P1A_Physibel_model(ii).trc

**Step 1: Model Preparation**

P1A_Physibel_model(i).dxf

P1A_Physibel_model(ii).dxf

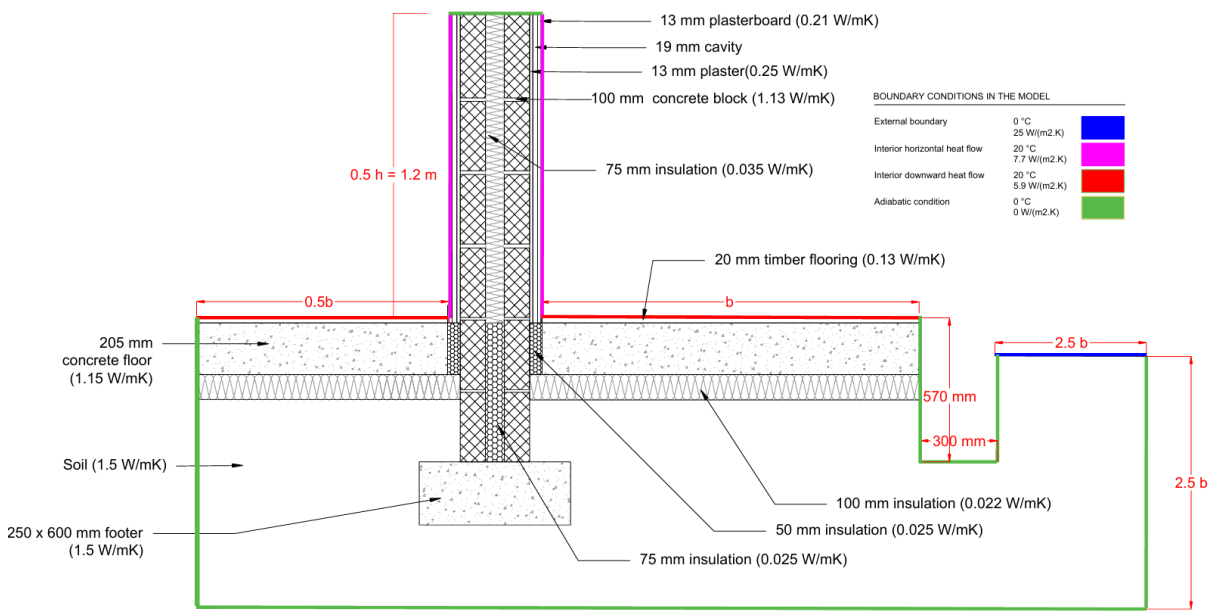


**Figure 97 Materials, boundary conditions and dimensions of model(i) for Part 1**

As outlined in Section 18, Step 2, BR497 requires two separate models to simulate heat losses. In Part 1, both models apply the adiabatic boundary condition up to the level of the floor insulation. Figure 98 illustrates the dimensions of the model(i).

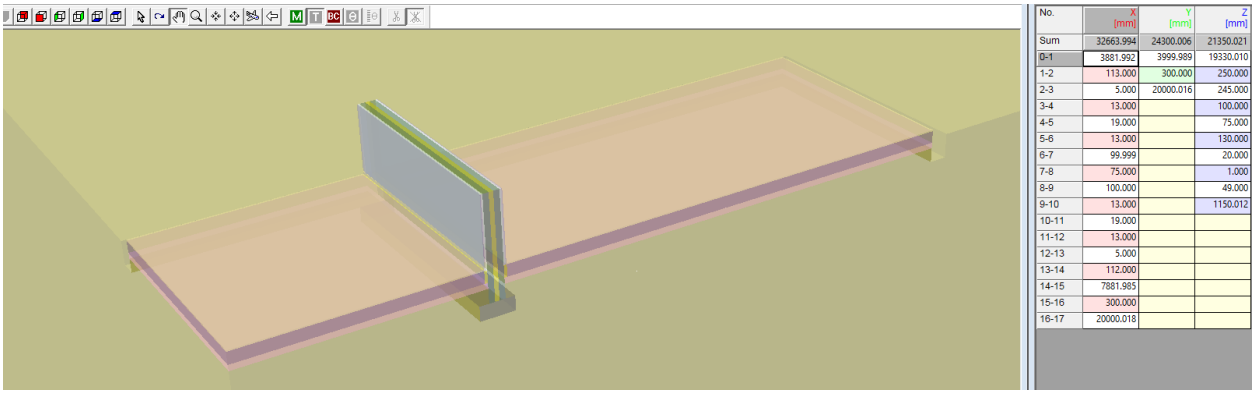


**Figure 98 Model (i) grid dimensions for the calculation model**

**Step 2: Calculation**

Linear thermal transmittance (ψ) = 0.092 W/mK

$\psi = \psi_c + (t_{wall} \times U_f')$

$\psi_c = \frac{(Q_1^{3D} - Q_2^{3D})}{(T_i - T_e) \times \ell} = \frac{(146.864 - 136.161)}{(20-0) \times 4.0} = 0.134$ W/mK

where:

$Q_1^{3D}$ = total heat loss from the model(i) (W)

$Q_2^{3D}$ = total heat loss from the model(ii) (W)

$\ell$ = width of floor (in the model) parallel to the separating wall (m)

$U_f' = \frac{Q_f}{(b+0.5b+t_{wall}) \times \ell \times (T_i - T_e)} = \frac{136.161}{(8+4+0.365) \times 4.0 \times (20-0)} = 0.138$ W/m²K

where:

$U_f'$ = U-value of the heat-loss floor

$t_{wall}$ = thickness of the separating wall

$Q_f = Q_2^{3D}$, the heat flow into the heat-loss floor of the second 3D model, model (ii)

$\psi = \psi_c + (t_{wall} \times U_f') = 0.134 + (0.365 \times 0.138) = 0.184$ W/mK

Half of the calculated ψ-value is assigned to each property.

In the case of a separting wall within a property, ψ is equal to $\psi_c$ and the full calculated ψ-value is assigned to property.

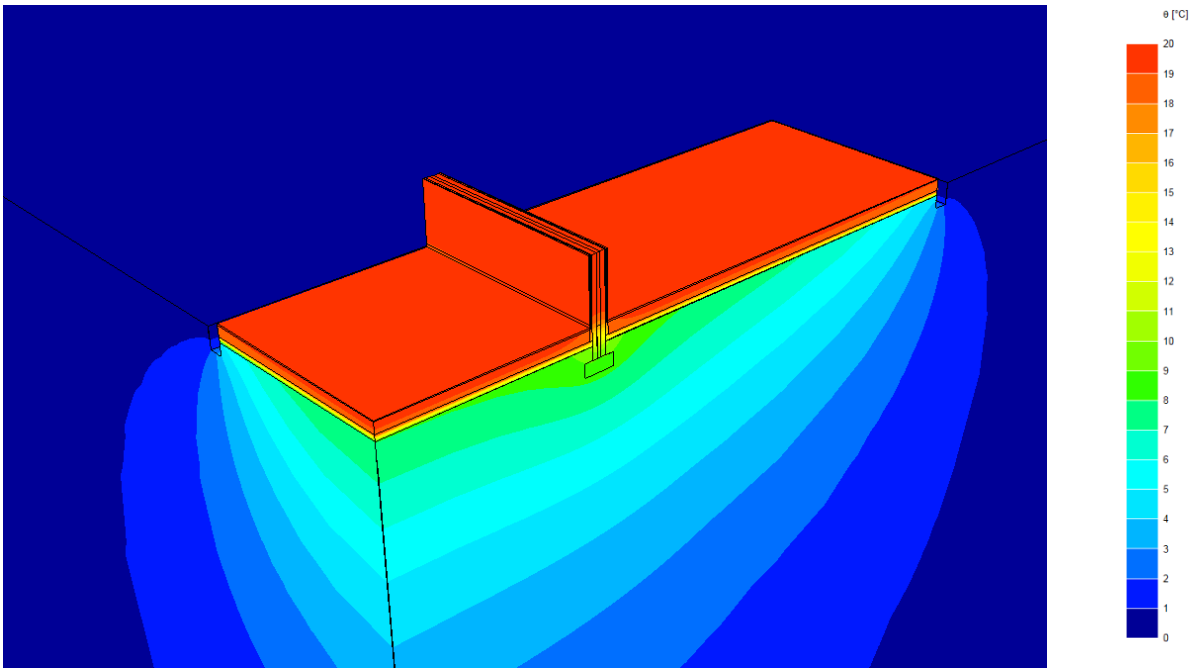


**Figure 99 Temperature contour**

### 18.1.2. Part 2: Adiabatic Condition extended 1m below part wall insulation level

P1A_Physibel_1m_model(i).trc

P1A_Physibel_1m_model(ii).trc

The third model, where the adiabatic boundary condition is extended 1 m below the party wall insulation level, follows the same procedure described in Section 0(Part1). Only the DXF model dimensions and the TRISCO model are presented here. The subsequent subsection will provide a comparative discussion of the results from all three models.

## Step 1: Model Preparation

P1A_Physibel_1m_model(i).dxf
P1A_Physibel_1m_model(ii).dxf

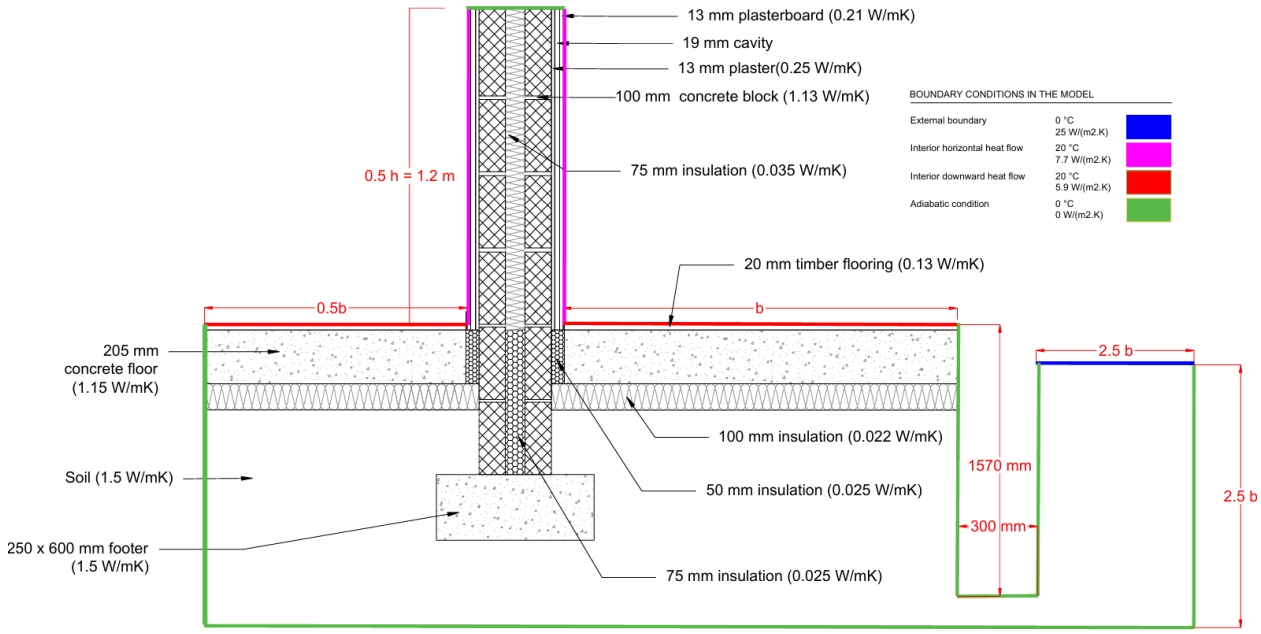


**Figure 100 Materials, boundary conditions and dimensions of model(i) for Part 2**

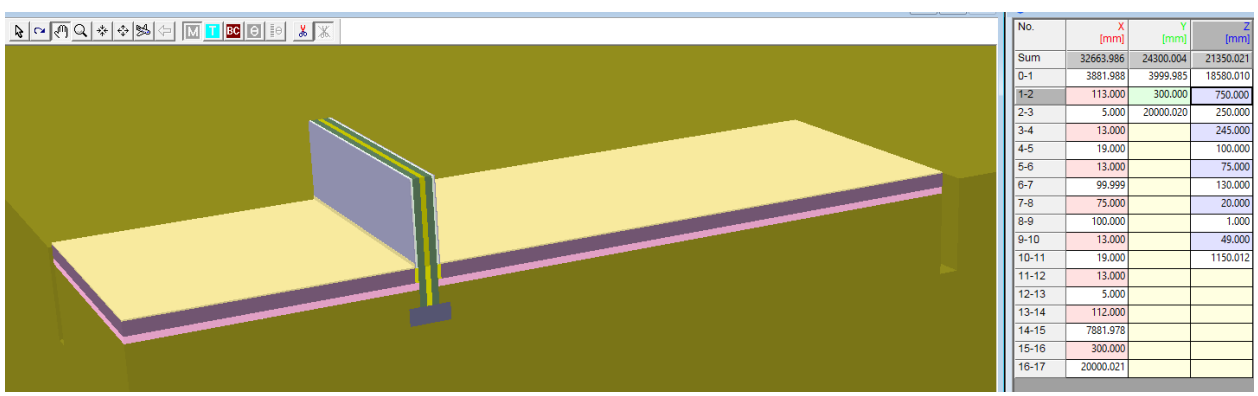

| No. | X [mm] | Y [mm] | Z [mm] |
|---|---|---|---|
| Sum | 32663.986 | 24300.004 | 21350.021 |
| 0-1 | 3881.988 | 3999.985 | 18580.010 |
| 1-2 | 113.000 | 300.000 | 750.000 |
| 2-3 | 5.000 | 20000.020 | 250.000 |
| 3-4 | 13.000 | | 245.000 |
| 4-5 | 19.000 | | 100.000 |
| 5-6 | 13.000 | | 75.000 |
| 6-7 | 99.999 | | 130.000 |
| 7-8 | 75.000 | | 20.000 |
| 8-9 | 100.000 | | 1.000 |
| 9-10 | 13.000 | | 49.000 |
| 10-11 | 19.000 | | 1150.012 |
| 11-12 | 13.000 | | |
| 12-13 | 5.000 | | |
| 13-14 | 112.000 | | |
| 14-15 | 7881.978 | | |
| 15-16 | 300.000 | | |
| 16-17 | 20000.021 | | |

**Figure 101 Model (ii) grid dimensions for the calculation model**

## Step 2: Calculation

Linear thermal transmittance (ψ) = 0.076 W/mK

$$\psi = \psi_c + (t_{wall} \times U_f')$$

$$\psi_c = \frac{(Q_1^{3D} - Q_2^{3D})}{(T_i - T_e) \times \ell} = \frac{(130.750 - 122.155)}{(20-0) \times 4.0} = 0.107 \text{ W/mK}$$

where:

$Q_1^{3D}$ = total heat loss from the model(i) (W)

$Q_2^{3D}$ = total heat loss from the model(ii) (W)

$\ell$ = width of floor (in the model) parallel to the separating wall (m)

$$U_f' = \frac{Q_f}{(b+0.5b+t_{wall}) \times \ell \times (T_i - T_e)} = \frac{122.155}{(8+4+0.365) \times 4.0 \times (20-0)} = 0.123 \text{ W/m}^2\text{K}$$

where:

$U_f'$ = U-value of the heat-loss floor

$t_{wall}$ = thickness of the separating wall

$Q_f = Q_2^{3D}$, the heat flow into the heat-loss floor of the second 3D model, model (ii)

$\psi = \psi_c + (t_{wall} \times U_f') = 0.107 + (0.365 \times 0.123) = 0.152$ W/mK

Half of the calculated ψ-value is assigned to each property.

In the case of a separting wall within a property, ψ is equal to $\psi_c$ and the full calculated ψ-value is assigned to property.

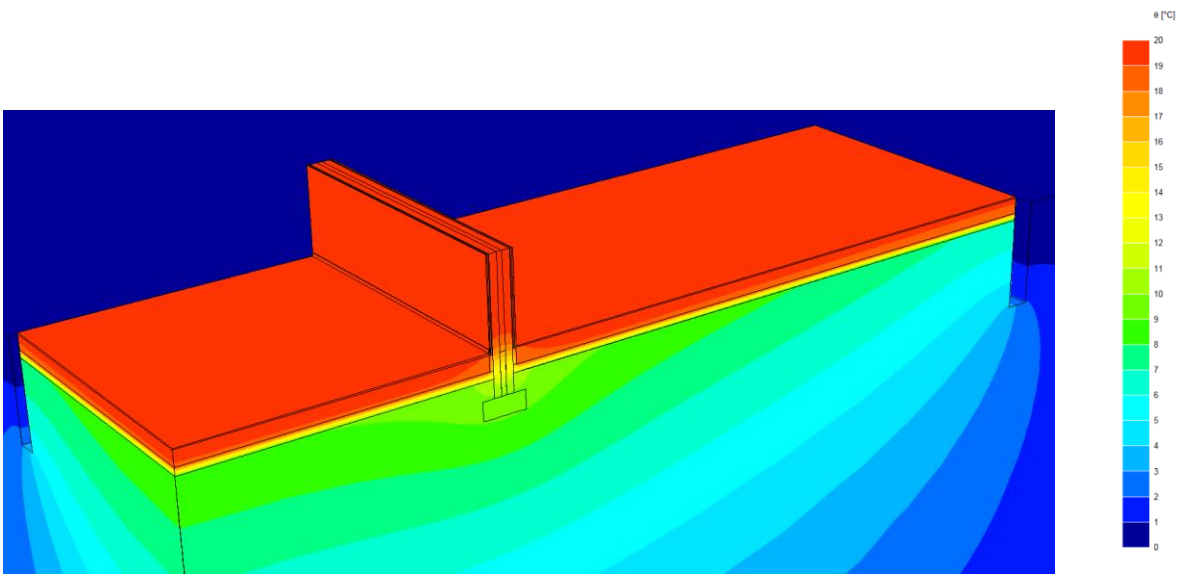


**Figure 102 Temperature contour**

### 18.1.3. Discussion

BR497 Section 4.8.1 calculates the ψ-value of the party wall/ground floor junction by applying adiabatic boundary conditions to the floor and party wall, thereby excluding the influence of the external walls.

The calculated ψ-value is highly sensitive to the vertical extent of the adiabatic boundary. In the BR497 approach, the boundary is placed at ground level, allowing heat to leave the floor through the ground at a relatively high level, resulting in a conservative ψ-value.

To evaluate this effect, two additional models were analysed: one with the adiabatic boundary at the level of the party wall insulation and one with the boundary extended 1 m below the insulation. The results above demonstrate that extending the adiabatic boundary deeper reduces the heat flux and therefore the ψ-value.

Figure 103 illustrates this behaviour. A deeper adiabatic boundary increases the heat flow path through the ground, restricting heat transfer and reducing the calculated ψ-value. To avoid this sensitivity, we recommend modelling the external walls instead of replacing them with adiabatic boundaries.

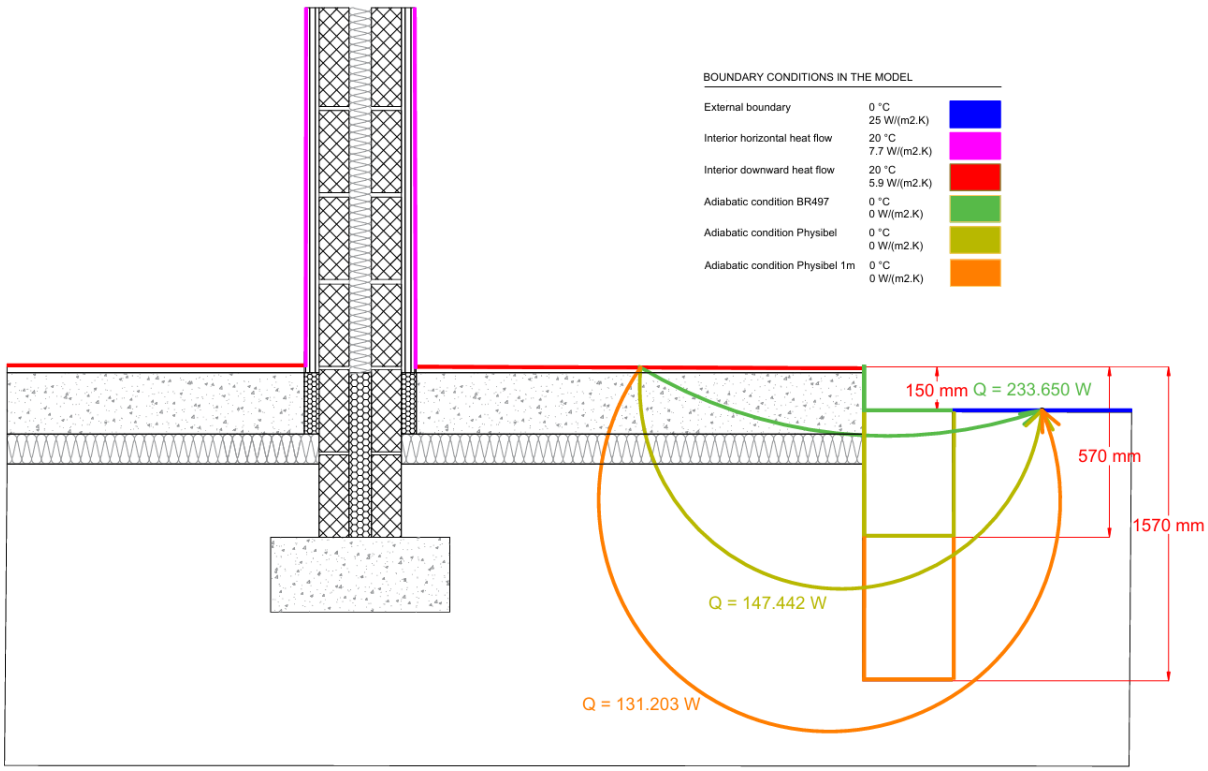


**Figure 103 Heat flow trajectory and values for different models**

## 19. P1b – Party wall/ground-floor junction (suspended floor)

P1B_Suspended_Floor_model(i).trc
P1B_Suspended_Floor_model(ii).trc

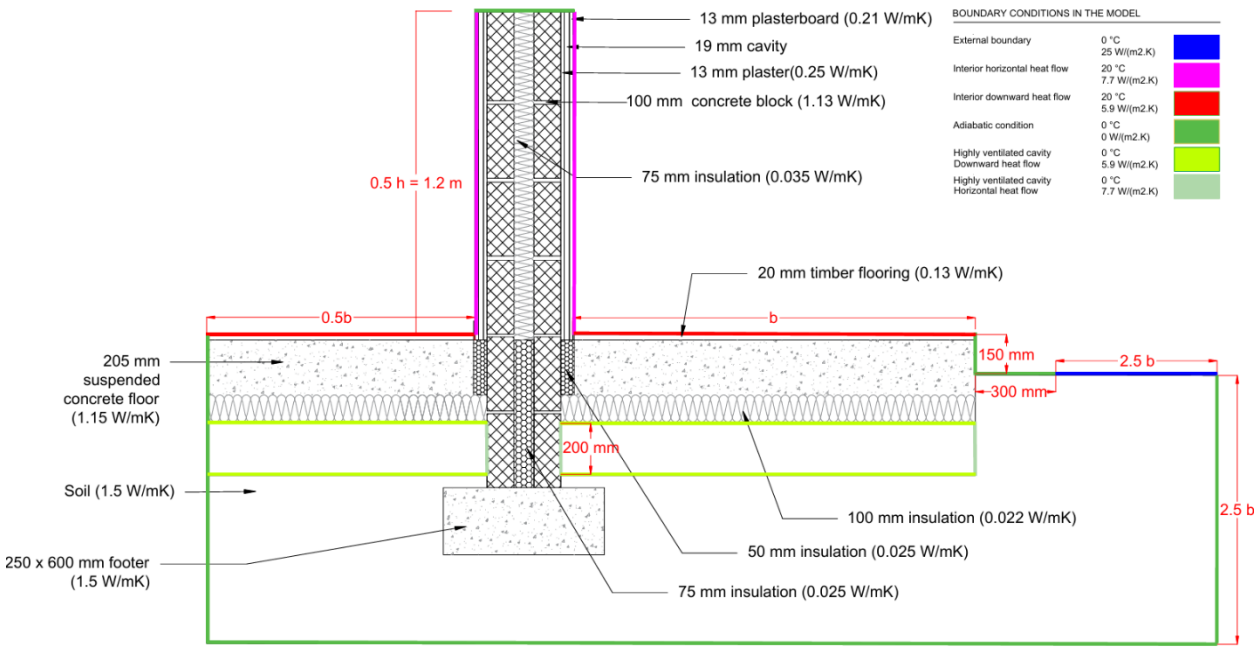


**Figure 104 Materials and boundary conditions of model (i)**

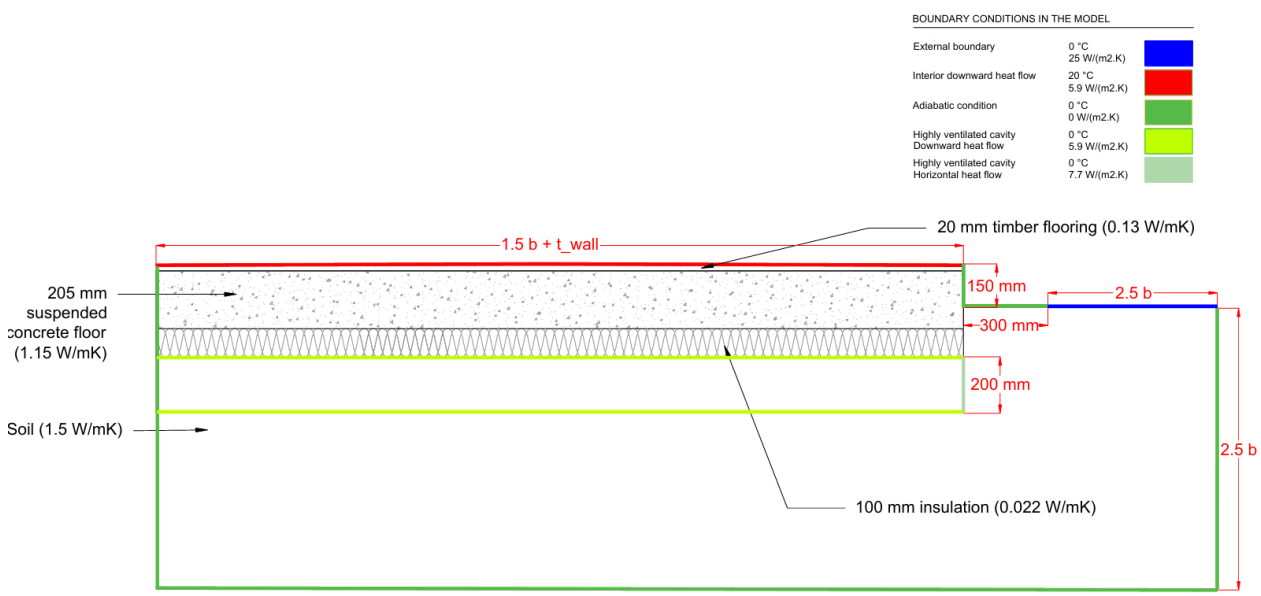


**Figure 105 Materials and boundary conditions of model (ii)**

### Step 1: Identify junction type

- P1 – Party wall/ground floor – between dwellings

**Step 2: Refer to the appropriate conventions within BR497**

- 4.8.1 Party wall/ground-floor junction
- 2.5 Boundary conditions

BR497 Section 4.8.1 requires two model to be simulated. First, the floor with the separating wall giving the modelled heat loss $Q_1^{3D}$ , and secondly the floor without the separating wall giving the modelled heat loss $Q_2^{3D}$. Step 3 to 6 explains how to model the floor with separating wall and step 6 to 8 explains how to model the floor without the separating wall.

**Step 3: Prepare geometry of model (i) in DXF format:** P1B_Suspended_Floor_model(i).dxf

See section 2.1 and section18 , step 3 in this document.

Note: The modelling procedure for P1 is described in detail in Section 4.8.1 of the BR497 document. First model(i) is prepared and simulated in TRSICO.

The modelling procedure for the suspended floor at the party wall/ground-floor junction is identical to that used for the slab-on-ground detailed in the previous section. Only the model dimensions and block arrangement are provided here.

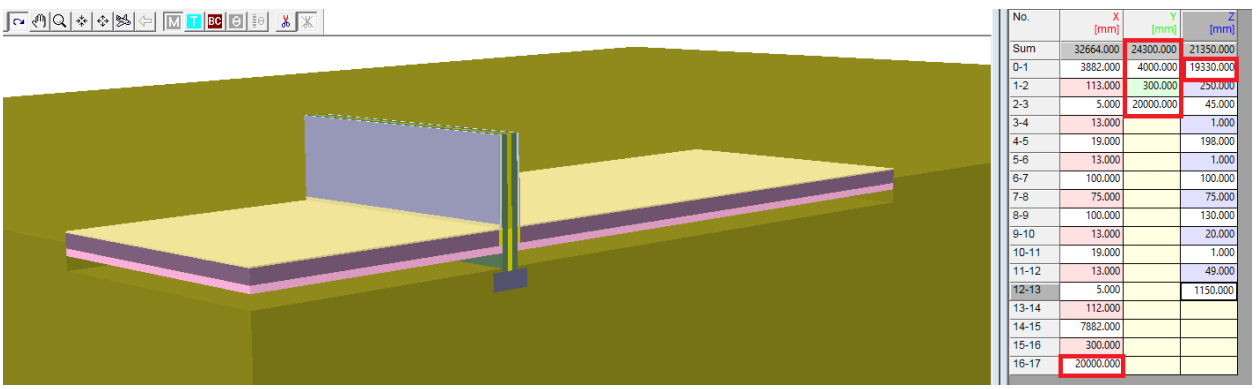

| No. | X [mm] | Y [mm] | Z [mm] |
|---|---|---|---|
| Sum | 32664.000 | 24300.000 | 21350.000 |
| 0-1 | 3882.000 | 4000.000 | 19330.000 |
| 1-2 | 113.000 | 300.000 | 250.000 |
| 2-3 | 5.000 | 20000.000 | 45.000 |
| 3-4 | 13.000 | | 1.000 |
| 4-5 | 19.000 | | 198.000 |
| 5-6 | 13.000 | | 1.000 |
| 6-7 | 100.000 | | 100.000 |
| 7-8 | 75.000 | | 75.000 |
| 8-9 | 100.000 | | 130.000 |
| 9-10 | 13.000 | | 20.000 |
| 10-11 | 19.000 | | 1.000 |
| 11-12 | 13.000 | | 49.000 |
| 12-13 | 5.000 | | 1150.000 |
| 13-14 | 112.000 | | |
| 14-15 | 7882.000 | | |
| 15-16 | 300.000 | | |
| 16-17 | 20000.000 | | |

**Figure 106 Model (i) dimensions for the calculation model**

Blocks

| No. | | Col. | Xmin | Xmax | Ymin | Ymax | Zmin | Zmax |
|---|---|---|---|---|---|---|---|---|
| 1 | | 31 | 0 | 17 | 0 | 3 | 0 | 8 |
| 2 | | 170 | 0 | 17 | 0 | 3 | 8 | 13 |
| 3 | | 175 | 0 | 15 | 0 | 1 | 3 | 6 |
| 4 | | 135 | 7 | 8 | 0 | 1 | 2 | 9 |
| 5 | | 135 | 2 | 6 | 0 | 1 | 7 | 9 |
| 6 | | 135 | 9 | 13 | 0 | 1 | 7 | 9 |
| 7 | | 88 | 6 | 7 | 0 | 1 | 2 | 13 |
| 8 | | 88 | 8 | 9 | 0 | 1 | 2 | 13 |
| 9 | | 136 | 1 | 14 | 0 | 1 | 1 | 2 |
| 10 | | 118 | 0 | 6 | 0 | 1 | 6 | 7 |
| 11 | | 118 | 9 | 15 | 0 | 1 | 6 | 7 |
| 12 | | 185 | 0 | 6 | 0 | 1 | 4 | 5 |
| 13 | | 185 | 9 | 15 | 0 | 1 | 4 | 5 |
| 14 | | 15 | 0 | 3 | 0 | 1 | 9 | 12 |
| 15 | | 15 | 12 | 15 | 0 | 1 | 9 | 12 |
| 16 | | 174 | 0 | 2 | 0 | 1 | 11 | 13 |
| 17 | | 174 | 13 | 15 | 0 | 1 | 11 | 13 |
| 18 | | 174 | 2 | 3 | 0 | 1 | 12 | 13 |
| 19 | | 174 | 12 | 13 | 0 | 1 | 12 | 13 |
| 20 | | 241 | 4 | 5 | 0 | 1 | 9 | 13 |
| 21 | | 240 | 10 | 11 | 0 | 1 | 9 | 13 |
| 22 | | 72 | 0 | 2 | 0 | 1 | 7 | 9 |
| 23 | | 72 | 13 | 15 | 0 | 1 | 7 | 9 |
| 24 | | 145 | 3 | 4 | 0 | 1 | 9 | 13 |
| 25 | | 145 | 11 | 12 | 0 | 1 | 9 | 13 |
| 26 | | 161 | 5 | 6 | 0 | 1 | 9 | 13 |
| 27 | | 161 | 9 | 10 | 0 | 1 | 9 | 13 |
| 28 | | 151 | 7 | 8 | 0 | 1 | 9 | 13 |
| 29 | | 166 | 0 | 2 | 0 | 1 | 10 | 11 |
| 30 | | 166 | 13 | 15 | 0 | 1 | 10 | 11 |
| 31 | | 191 | 15 | 16 | 0 | 1 | 8 | 10 |
| 32 | | 191 | 0 | 16 | 1 | 2 | 8 | 13 |

**Figure 107 Blocks Arrangement for model (i)**

**Step 4: Define material properties and boundary conditions**

- For boundary conditions and surface heat transfer coefficients (as per section 2.5 of BR497)
- Some of the colours used in the model do not match the default values provided in the TRISCO Colour Database. These colours have been manually adjusted to more accurately reflect the configuration of Worked Example 9 from BR497. These modifications must be performed manually within the TRISCO interface.
- The specific changes are highlighted with red squares in Figure 108, indicating where the colour adjustments were made to align with the example.

Colours

| Col. | | Type | Subtype | Physical flow dir. | Geometrical flow dir. | Name | ε1 / ε2 [- / -] | λ [W/mK] | ε [-] | θ [°C] | h [W/m²K] | q [W/m²] | θa [°C] | hc [W/m²K] | Pc [W] | θr [°C] | Standard |
|---|---|---|---|---|---|---|---|---|---|---|---|---|---|---|---|---|---|
| 15 | | MATERIAL | | | | softwood 500 kg/m3 | | 0.130 | | | | | | | | | |
| 31 | | MATERIAL | | | | clay or silt | | 1.500 | | | | | | | | | |
| 72 | | MATERIAL | | | | concrete density 1800 kg/m3 | | 1.150 | | | | | | | | | |
| 88 | | MATERIAL | | | | concrete density 2000 kg/m3 | | 1.130 | | | | | | | | | |
| 118 | | MATERIAL | | | | insulation 0.022 W/mK | | 0.022 | | | | | | | | | |
| 135 | | MATERIAL | | | | insulation 0.025 W/mK | | 0.025 | | | | | | | | | |
| 136 | | MATERIAL | | | | reinforced concrete (steel 2%) | | 1.500 | | | | | | | | | |
| 145 | | MATERIAL | | | | gypsum 1200 kg/m3 | | 0.210 | | | | | | | | | |
| 151 | | MATERIAL | | | | insulation 0.035 W/mK | | 0.035 | | | | | | | | | |
| 161 | | MATERIAL | | | | gypsum plasterboard | | 0.250 | | | | | | | | | |
| 166 | | BC_SIMPL | HI | DOWN | | indoors downwards heat flow | | | | 20.0 | 5.90 | 0 | | | | | EN6946 |
| 170 | | BC_SIMPL | HE | | | exterior | | | | 0.0 | 25.00 | 0 | | | | | EN6946 |
| 174 | | BC_SIMPL | HI | HOR | | interior (normal) horizontal heat flow | | | | 20.0 | 7.70 | 0 | | | | | EN6946 |
| 175 | | BC_SIMPL | HI | DOWN | | highly ventilated cavity downwards heat flow | | | | 3.5 | 5.90 | 0 | | | | | EN6946 |
| 185 | | BC_SIMPL | HI | HOR | | highly ventilated cavity; horizontal heat flow | | | | 3.5 | 7.70 | 0 | | | | | EN6946 |
| 191 | | BC_SIMPL | NIHIL | | | adiabatic | | | | 0.0 | 0.00 | 0 | | | | | NIHIL |
| 240 | | EQUIMAT | LAYER | HOR | X | | 0.90 / 0.90 | 0.111 | | | | | | | | | EN6946 |
| 241 | | EQUIMAT | LAYER | HOR | X | | 0.90 / 0.90 | 0.111 | | | | | | | | | EN6946 |

**Figure 108 Materials and boundary condition properties for analysis**

- According to BR497 Section 4.8.1, underfloor space is modelled with downward and horizontal heat flow, using and under floor air temperature (Tu = 3.5 C) calculated from [PartyWall_GroundFloor_Junction_Calculator.xlsx.]

**Step 5: Define derived thermal properties and run the calculation**

- Prepare the grid for analysis using 'Auto split' and then run the calculation.
  *Grid → Auto split…* (see section 2.2 for parameters)

| Col. | Type | Name | ta [°C] | Flow in [W] | Flow out [W] |
|---|---|---|---|---|---|
| 166 | BC_SIMPL | indoors downwards heat fl | | 246.3320 | 0.0000 |
| 170 | BC_SIMPL | exterior | | 0.0000 | 167.2090 |
| 174 | BC_SIMPL | interior_(normal)_horizon | | 20.1280 | 0.0000 |
| 175 | BC_SIMPL | highly_ventilated_cavity_ | | 62.3253 | 145.3700 |
| 185 | BC_SIMPL | highly_ventilated_cavity; | | 3.6196 | 19.8256 |
| 191 | BC_SIMPL | adiabatic | | 0.0000 | 0.0000 |

**Figure 109 Model (i) Heat flow results in TRISCO**

**Step 6: Prepare geometry of model (ii) in DXF format:** [P1B_Suspended_Floor_model(ii).dxf]

The modeling approach described in Section 18 Step 3 and Step 6 is applied identically in Model(ii) here, but without party wall and foundation.

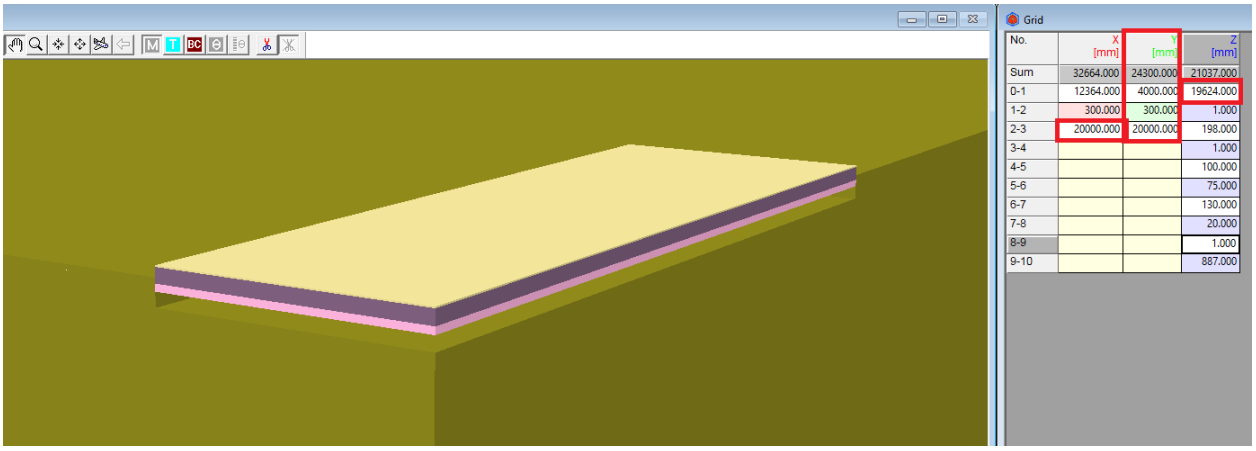


**Figure 110 Model (ii) dimensions for the calculation model**

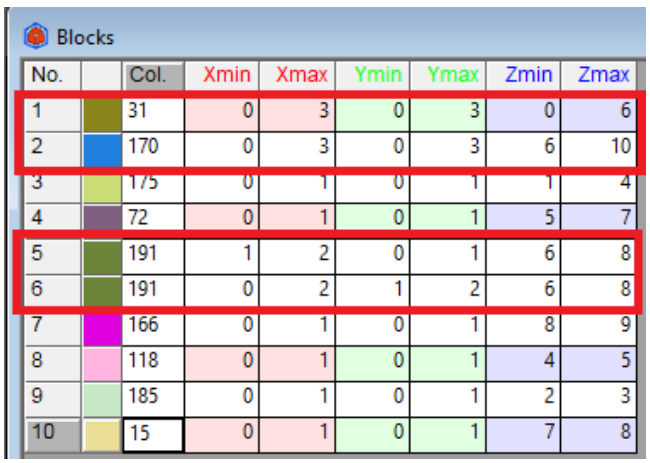

Blocks

| No. | | Col. | Xmin | Xmax | Ymin | Ymax | Zmin | Zmax |
|---|---|---|---|---|---|---|---|---|
| 1 | | 31 | 0 | 3 | 0 | 3 | 0 | 6 |
| 2 | | 170 | 0 | 3 | 0 | 3 | 6 | 10 |
| 3 | | 175 | 0 | 1 | 0 | 1 | 1 | 4 |
| 4 | | 72 | 0 | 1 | 0 | 1 | 5 | 7 |
| 5 | | 191 | 1 | 2 | 0 | 1 | 6 | 8 |
| 6 | | 191 | 0 | 2 | 1 | 2 | 6 | 8 |
| 7 | | 166 | 0 | 1 | 0 | 1 | 8 | 9 |
| 8 | | 118 | 0 | 1 | 0 | 1 | 4 | 5 |
| 9 | | 185 | 0 | 1 | 0 | 1 | 2 | 3 |
| 10 | | 15 | 0 | 1 | 0 | 1 | 7 | 8 |

**Figure 111 Blocks Arrangement for model (ii)**

### Step 7: Define material properties and boundary conditions

- For boundary conditions and surface heat transfer coefficients (as per section 2.5 of BR497)
- The same material conditions are applied in Model (ii). However, since the separating wall is not included in this version, most of the materials used in the first model are not present. The material properties are shown in Figure 112**Error! Reference source not found.**, with any deviations from the default values in the TRISCO Colour Database clearly highlighted using red squares.

Colours

| Col. | | Type | Subtype | Physical flow dir. | Geometrical flow dir. | Name | ε1 / ε2 [- / -] | λ [W/mK] | ε [-] | θ [°C] | h [W/m²K] | q [W/m²] | θa [°C] | hc [W/m²K] | Pc [W] | θr [°C] | Standard |
|---|---|---|---|---|---|---|---|---|---|---|---|---|---|---|---|---|---|
| 15 | | MATERIAL | | | | softwood 500 kg/m3 | | 0.130 | | | | | | | | | |
| 31 | | MATERIAL | | | | clay or silt | | 1.500 | | | | | | | | | |
| 72 | | MATERIAL | | | | concrete density 1800 kg/m3 | | 1.150 | | | | | | | | | |
| 118 | | MATERIAL | | | | insulation 0.022 W/mK | | 0.022 | | | | | | | | | |
| 166 | | BC_SIMPL | HI | DOWN | | indoors downwards heat flow | | | | 20.0 | 5.90 | 0 | | | | | EN6946 |
| 170 | | BC_SIMPL | HE | | | exterior | | | | 0.0 | 25.00 | 0 | | | | | EN6946 |
| 175 | | BC_SIMPL | HI | DOWN | | highly ventilated cavity downwards heat flow | | | | 3.5 | 5.90 | 0 | | | | | EN6946 |
| 185 | | BC_SIMPL | HI | HOR | | highly ventilated cavity; horizontal heat flow | | | | 3.5 | 7.70 | 0 | | | | | EN6946 |
| 191 | | BC_SIMPL | NIHIL | | | adiabatic | | | | 0.0 | 0.00 | 0 | | | | | NIHIL |

**Figure 112 Materials and boundary condition properties for analysis**

- According to BR497 Section 4.8.1, underfloor space is modelled with downward and horizontal heat flow, using and under floor air temperature (Tu = 3.5C) calculated from PartyWall_GroundFloor_Junction_Calculator.xlsx.

**Step 8: Define derived thermal properties and run the calculation**

- Prepare the grid for analysis using 'Auto split' and then run the calculation.
  *Grid → Auto split…* (see section 2.2 for parameters)

| Col. | Type | Name | ta [°C] | Flow in [W] | Flow out [W] |
|---|---|---|---|---|---|
| 166 | BC_SIMPL | indoors downwards heat fl | | 247.2090 | 0.0000 |
| 170 | BC_SIMPL | exterior | | 0.0000 | 167.3030 |
| 175 | BC_SIMPL | highly_ventilated_cavity_ | | 67.8647 | 147.8410 |
| 185 | BC_SIMPL | highly_ventilated_cavity; | | 3.6596 | 3.5891 |
| 191 | BC_SIMPL | adiabatic | | 0.0000 | 0.0000 |

**Figure 113 Model (ii) heat flow results in TRISCO**

**Calculated Result from the analysis:**

Linear thermal transmittance (ψ) = 0.166 W/mK

$$\psi = \psi_c + (t_{wall} \times U_f')$$

$$\psi_c = \frac{(Q_1^{3D} - Q_2^{3D})}{(T_i - T_e) \times \ell} = \frac{(266.460 - 247.209)}{(20-0) \times 4.0} = 0.241 \text{ W/mK}$$

where:

$Q_1^{3D}$ = total heat loss from the model(i) (W)

$Q_2^{3D}$ = total heat loss from the model(ii) (W)

$\ell$ = width of floor (in the model) parallel to the separating wall (m)

$$U_f' = \frac{Q_f}{(b+0.5b+t_{wall}) \times \ell \times (T_i - T_e)} = \frac{247.209}{(8+4+0.365) \times 4.0 \times (20-0)} = 0.250 \text{ W/m}^2\text{K}$$

where:

$U_f'$ = U-value of the heat-loss floor

$t_{wall}$ = thickness of the separating wall

$Q_f = Q_2^{3D}$, the heat flow into the heat-loss floor of the second 3D model, model (ii)

$\psi = \psi_c + (t_{wall} \times U_f') = 0.241 + (0.365 \times 0.250) = 0.332$ W/mK

Half of the calculated ψ-value is assigned to each property.

In the case of a separting wall within a property, ψ is equal to $\psi_c$ and the full calculated ψ-value is assigned to property.

**Note, as per BR497:**

- The height of the party wall, $h_{pw}$ is taken to be 2.4 m. The height from the finished floor level to the adiabatic at the top of the separating wall in the model is ½$h_{pw}$, ie 1.2 m.
- The level of the external soil (in the model) should be set 150 mm below that of the internal floor finish.
- The characteristic dimensions of the floor (b) in the model should be set to 8 m, which corresponds to a P/A of 0.25 (section 2.2.2 of BR497). P/A are defined in EN ISO 13370.
- The underfloor space is at an intermediate temperature, Tu, between Ti and Te. Tu should be calculated from the heat balance in accordance with the Annex-G of EN ISO-13370 for a P/A of 0.5. This results in a characteristic dimension (B)=4m. But this is only limited to calculate the underfloor air temperature Tu. However, for the later steps to determine the Ψ value, we need to model the characteristic dimension of floor (B=8m) mentioned as per section 2.2.2, BR497.
- The underfloor temperature Tu shall be calculated as per EN ISO 13370 (G.1) or BRE U value calculator. Alternatively, you can also use PartyWall_GroundFloor_Junction_Calculator.xlsx
- When calculating Tu, ventilation of the underfloor space should be determined in accordance with Annex G of BS EN ISO 13370 assuming the wind speed as 5 m/s, shielding factor as 0.05 and the ventilation openings equivalent to 0.0015 m² per metre length of the floor perimeter.
- External walls are replaced by the adiabatic boundary (to avoid the ψ-value being dependent on the construction of external wall) at the edge of the floor which is verticall down from the finished floor level and then 300 mm horizontally at the level of the external soil, which itself 150 mm below the finished floor level.
- The results obtained in this document differ from those presented in Worked Example 9 of the BR497 document, despite using the same model, which suggests a potential error in BR497. Additionally, following the BR497 approach is considered conservative because the heat losses from the floor to the external boundary and consequently the ψ-value are highly dependent on the position of the adiabatic condition.

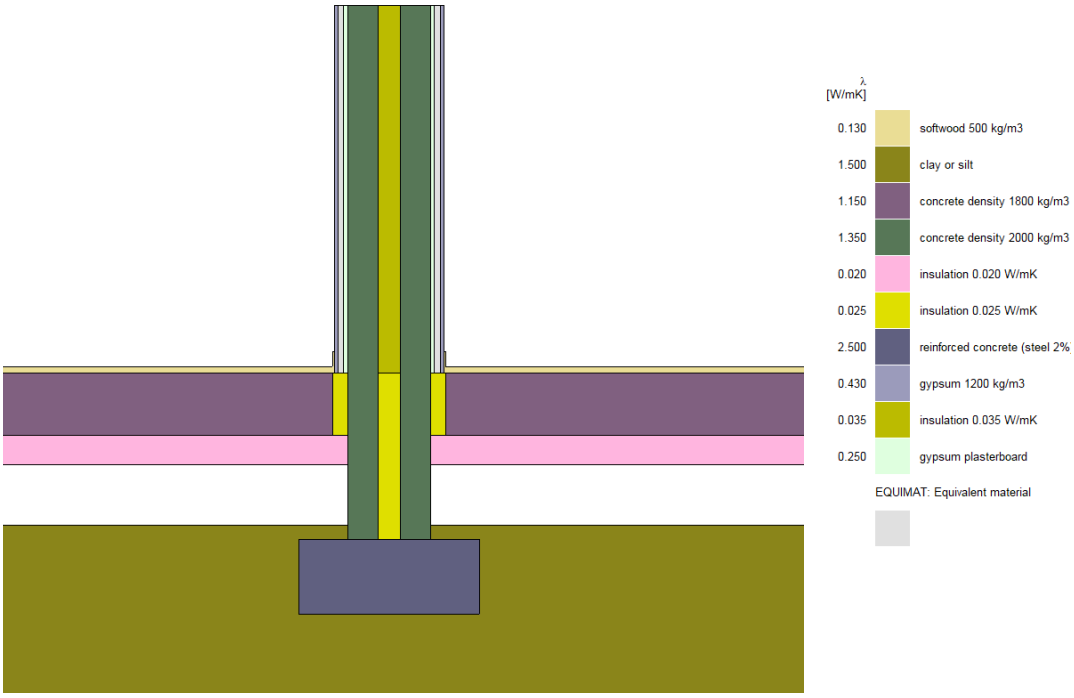


**Figure 114: Material properties**

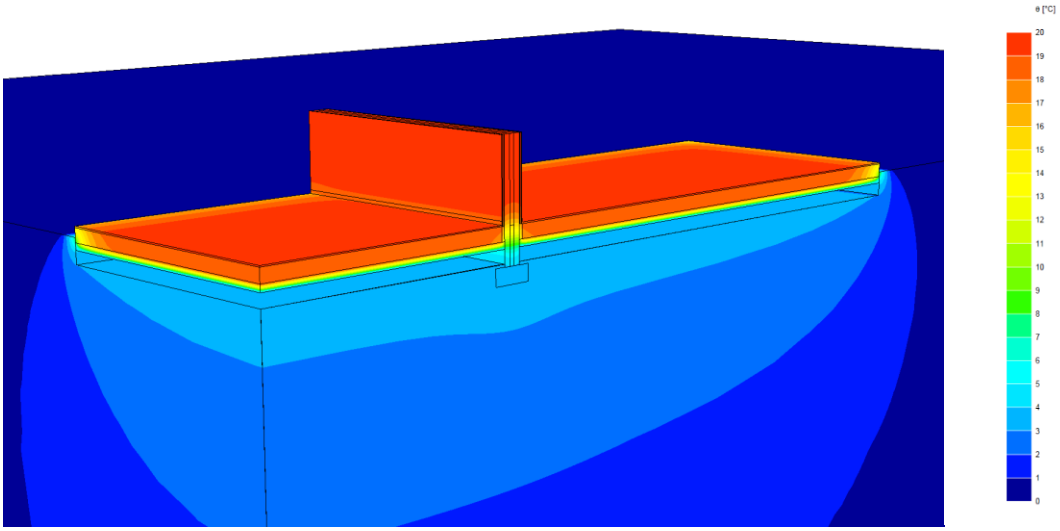


**Figure 115: Temperature contour from the analysis**

## 20. P4 – Party wall insulation at ceiling level

P4_PARTY_WALL_INSULATION_AT_CEILING_LEVEL.trc

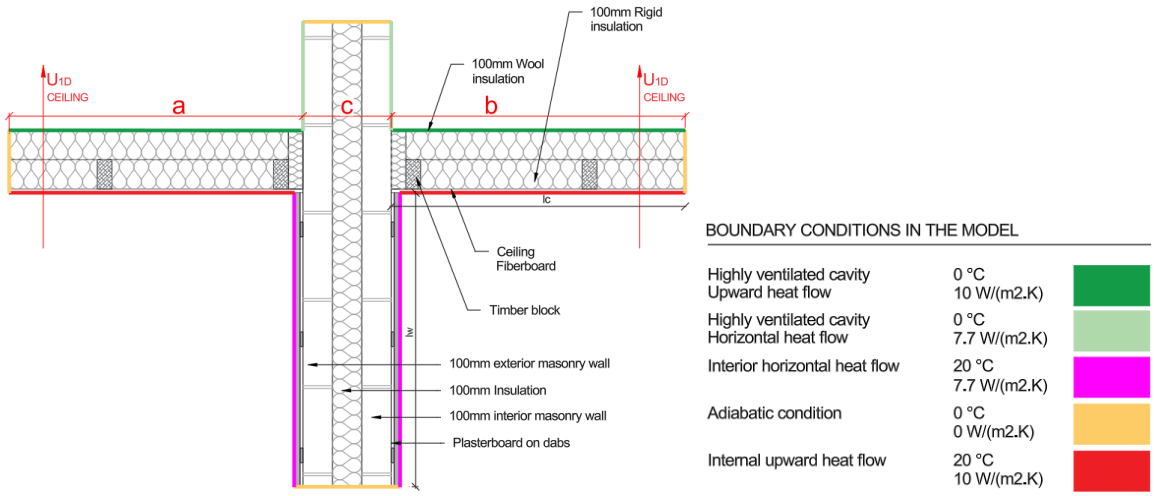


**Figure 116: party wall insulation at ceiling level – Junction P4**

### Step 1: Identify junction type

Roof (insulation at ceiling level)

### Step 2: Refer to appropriate convention(s) within BR497

- 4.1.3 Roof/party wall (insulated at ceiling)
- 2.5 Boundary conditions

### Step 3: Prepare geometry in DXF format: P4_PARTY_WALL_INSULATION_AT_CEILING_LEVEL.dxf

See section 2.1 in this document.

Note: According to BR497, Section 3.1.3.1, if a repeating thermal bridge is located within half of its normal spacing from the junction in the flanking element, it should be included in the model.
All other repeating thermal bridges in the flanking element should be excluded from both the model and the determination of the flanking element U-value. Therefore, in this example, the second timber member away from the corner junction is not included in the model.
For more information on this procedure, we recommend reviewing Method 2 in document B15 on the Physibel Knowledge Base.

### Step 4: Define material properties and boundary conditions

- Boundary conditions, surface heat transfer coefficients (as per section 2.5 of BR497)

Colours

| Col. | | Type | Subtype | Physical flow dir. | Geometrical flow dir. | Name | ε1 / ε2 [- / -] | λ [W/mK] | ε [-] | θ [°C] | h [W/m²K] | q [W/m²] | θa [°C] | hc [W/m²K] | Pc [W] | θr [°C] | Standard |
|---|---|---|---|---|---|---|---|---|---|---|---|---|---|---|---|---|---|
| 15 | | MATERIAL | | | | softwood 500 kg/m3 | | 0.130 | | | | | | | | | |
| 71 | | MATERIAL | | | | fibreboard incl. MDF(e) 250 kg/m3 | | 0.070 | | | | | | | | | |
| 131 | | MATERIAL | | | | insulation 0.040 W/mK | | 0.040 | | | | | | | | | |
| 133 | | MATERIAL | | | | insulation 0.030 W/mK | | 0.030 | | | | | | | | | |
| 148 | | MATERIAL | | | | masonry medium density | | 0.320 | | | | | | | | | |
| 151 | | MATERIAL | | | | insulation 0.035 W/mK | | 0.035 | | | | | | | | | |
| 161 | | MATERIAL | | | | gypsum plasterboard | | 0.250 | | | | | | | | | |
| 174 | | BC_SIMPL | HI | HOR | | interior (normal) horizontal heat flow | | | | 20.0 | 7.70 | 0 | | | | | EN6946 |
| 177 | | BC_SIMPL | HI | UP | | highly ventilated cavity upwards heat flow | | | | 0.0 | 10.00 | 0 | | | | | EN6946 |
| 185 | | BC_SIMPL | HI | HOR | | highly ventilated cavity; horizontal heat flow | | | | 0.0 | 7.70 | 0 | | | | | EN6946 |
| 190 | | BC_SIMPL | HI | UP | | indoors; upwards heat flow | | | | 20.0 | 10.00 | 0 | | | | | EN6946 |
| 241 | | EQUIMAT | LAYER | HOR | X | | 0.90 / 0.90 | 0.067 | | | | | | | | | EN6946 |
| 242 | | EQUIMAT | LAYER | HOR | X | | 0.90 / 0.90 | 0.067 | | | | | | | | | EN6946 |

**Figure 117: Materials and boundary condition properties for analysis**

## Step 5: Define the 1D U-value and areas of flanking elements

- The areas of flanking elements are the internal dimensions (as per 2.2.2; BR497)
  *Edit → Areas.*
- 1D Values are defined at the edges of flanking elements, and the required minimum length of wall and floor in the model as per 2.2.2; BR497.
  *Edit → U Values.*
  Since the second timber is not included in the model there is no need for 2D U-value calculation and enforced U-value to the system.

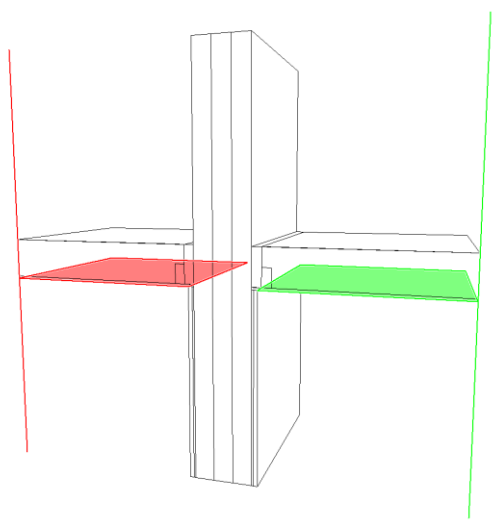

Areas

| No. | Xmin | Xmax | Ymin | Ymax | Zmin | Zmax | A [m²] |
|---|---|---|---|---|---|---|---|
| 1 | 0 | 17 | 0 | 1 | 11 | 11 | 1 |
| 2 | 49 | 66 | 0 | 1 | 11 | 11 | 0.999 |
| 3 | 0 | 0 | 0 | 0 | 0 | 0 | 0 |

U Values

| No. | Xmin | Xmax | Ymin | Ymax | Zmin | Zmax | U [W/m²K] | Enforced U [W/m²K] |
|---|---|---|---|---|---|---|---|---|
| 1 | 0 | 0 | 0 | 0 | 0 | 39 | 0.164 | |
| 2 | 66 | 66 | 0 | 0 | 0 | 39 | 0.164 | |
| 3 | 0 | 0 | 0 | 0 | 0 | 0 | 0.000 | |

**Figure 118: Areas and 1D U-values of flanking element for analysis**

**Step 6: Define derived thermal properties and run the calculation**

- Choose the output required to calculate from the analysis (Ψ-value / temperature factor ($f_{Rsi}$)).
  *Edit → Derived Thermal Properties…*
- Prepare the grid for analysis using 'Auto split' and then run the calculation.
  *Grid → Auto split…* (see section 2.2 for parameters)

**Note, as per BR497:**

- The length of flanking element of slab and wall is 1000mm or 3 times thickness of slab; whichever is greater.
- The temperature of the loft space, is considered to be equal to Te, the temperature of the external environment.
- If the indoor boundary condition is defined as indoor horizontal heat transfer, then below the ceiling is to be modelled with an indoor upward heat transfer boundary condition. The airspace at the top of the ceiling is modelled as highly ventilated upward heat flow and the boundary condition adjoining to the attic wall has highly ventilated horizontal heat flow (refer to Figure 116)
- For internal partitions within the same dwelling (or premises), the length lw over which the U-value applies includes the thickness of the partition wall.
  lw = a + b + c
- For a party wall between dwellings (or premises), the length lw over which the U-value applies is doesn't include the thickness of the party wall.
  lw = a + b with half of Ψ allocated to each dwelling (or premises).

**Calculated Result from the analysis:**

Linear thermal transmittance (Ψ) from software = 0.194 W/mK

$$\Psi = \frac{\phi}{(Ti - Te)} - U1 \times A1 - U2 \times A2 = \frac{10.457}{(20 - 0)} - 0.164 \times 1 - 0.164 \times 1 = 0.194\ W/mK$$

linear thermal transmittance for the junction (between 2 dwellings) = Ψ/2 = 0.097 W/mK

Temperature factor ($f_{R_{si}}$)= 0.921 (Check section 2.5 for critical temperature factors $f_c$)

**Default Ψ (as per SAP version 10.2)**

Roof/Party wall insulation at ceiling level = 0.48 W/mK

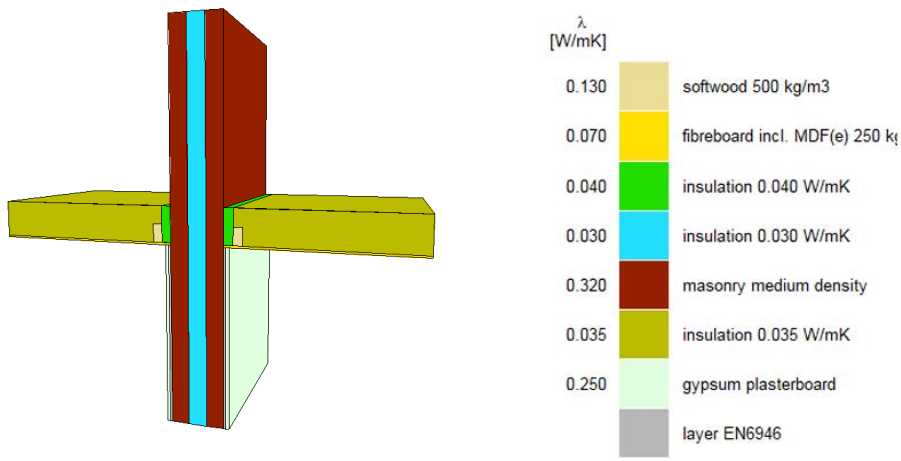


**Figure 119: Material properties**

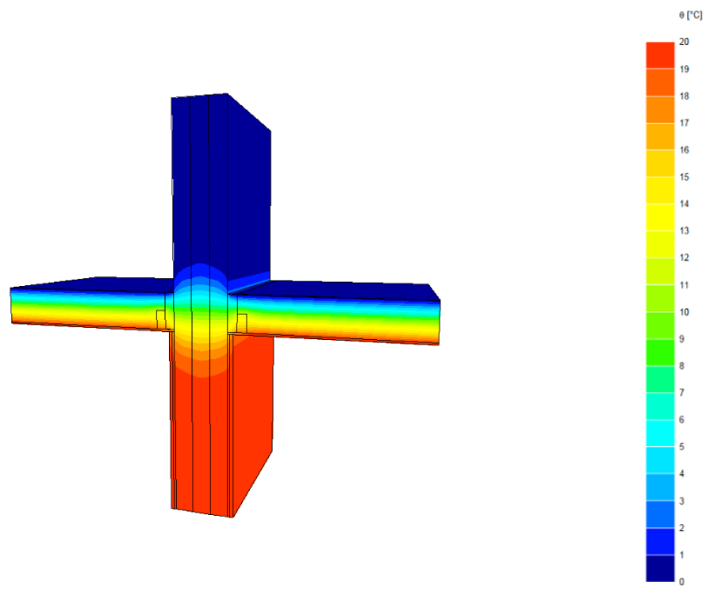


**Figure 120: Isotherms**

## 21. P5 – Party wall insulation at rafter level

P5_PARTY_WALL_INSULATION_AT_RAFTER_LEVEL.trc

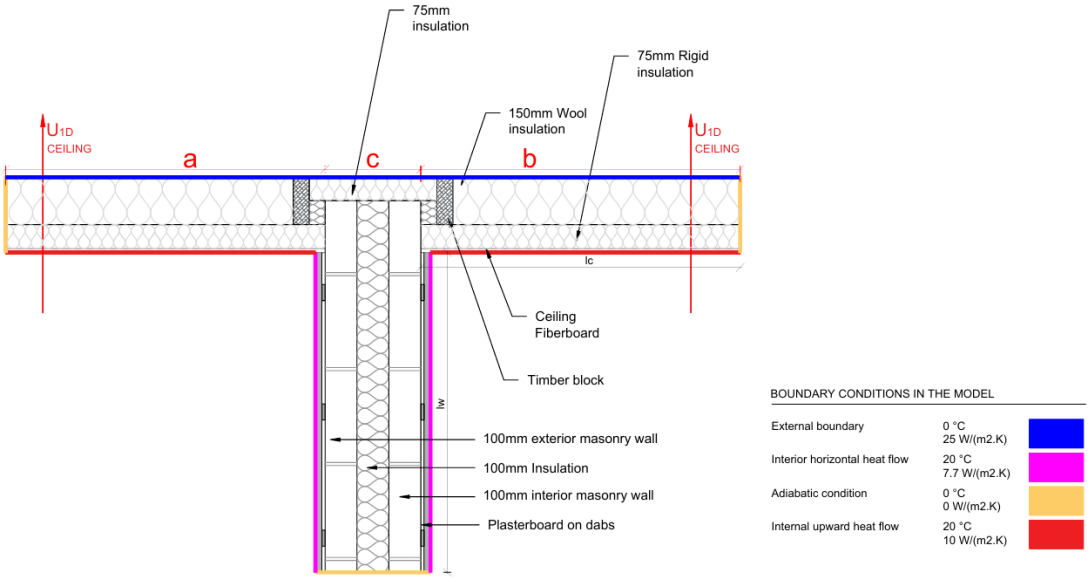


**Figure 121: party wall insulation at rafter level – Junction P5**

### Step 1: Identify junction type

Roof (insulation at rafter level)

### Step 2: Refer to appropriate convention(s) within BR497

- 4.1.6 Roof/party wall (insulated at roof level)
- 2.5 Boundary conditions

### Step 3: Prepare geometry in DXF format: P5_PARTY_WALL_INSULATION_AT_RAFTER_LEVEL.dxf

See section 2.1 in this document.

Note: According to BR497, Section 3.1.3.1, if a repeating thermal bridge is located within half of its normal spacing from the junction in the flanking element, it should be included in the model.
All other repeating thermal bridges in the flanking element should be excluded from both the model and the determination of the flanking element U-value. Therefore, in this example, the second timber member away from the corner junction is not included in the model.
For more information on this procedure, we recommend reviewing Method 2 in document B15 on the Physibel Knowledge Base.

### Step 4: Define material properties and boundary conditions

- Boundary conditions, surface heat transfer coefficients (as per section 2.5 of BR497)

Colours

| Col. | | Type | Subtype | Physical flow dir. | Geometrical flow dir. | Name | ε1 / ε2 [- / -] | λ [W/mK] | ε [-] | θ [°C] | h [W/m²K] | q [W/m²] | θa [°C] | hc [W/m²K] | Pc [W] | θr [°C] | Standard |
|---|---|---|---|---|---|---|---|---|---|---|---|---|---|---|---|---|---|
| 15 | | MATERIAL | | | | softwood 500 kg/m3 | | 0.130 | | | | | | | | | |
| 71 | | MATERIAL | | | | fibreboard incl. MDF(e) 250 kg/m3 | | 0.070 | | | | | | | | | |
| 131 | | MATERIAL | | | | insulation 0.040 W/mK | | 0.040 | | | | | | | | | |
| 133 | | MATERIAL | | | | insulation 0.030 W/mK | | 0.030 | | | | | | | | | |
| 148 | | MATERIAL | | | | masonry medium density | | 0.320 | | | | | | | | | |
| 151 | | MATERIAL | | | | insulation 0.035 W/mK | | 0.035 | | | | | | | | | |
| 161 | | MATERIAL | | | | gypsum plasterboard | | 0.250 | | | | | | | | | |
| 170 | | BC_SIMPL | HE | | | exterior | | | | 0.0 | 25.00 | 0 | | | | | EN6946 |
| 174 | | BC_SIMPL | HI | HOR | | interior (normal) horizontal heat flow | | | | 20.0 | 7.70 | 0 | | | | | EN6946 |
| 190 | | BC_SIMPL | HI | UP | | indoors; upwards heat flow | | | | 20.0 | 10.00 | 0 | | | | | EN6946 |
| 241 | | EQUIMAT | LAYER | HOR | X | | 0.90 / 0.90 | 0.071 | | | | | | | | | EN6946 |
| 242 | | EQUIMAT | LAYER | HOR | X | | 0.90 / 0.90 | 0.071 | | | | | | | | | EN6946 |

**Figure 122: Materials and boundary condition properties for analysis**

### Step 5: Define the 1D U-value and areas of flanking elements

- The areas of flanking elements are the internal dimensions (as per 2.2.2; BR497)
  *Edit → Areas.*
- 1D Values are defined at the edges of flanking elements, and the required minimum length of wall and floor in the model as per 2.2.2; BR497.
  *Edit → U Values.*
  Since the second timber is not included in the model there is no need for 2D U-value calculation and enforced U-value to the system.

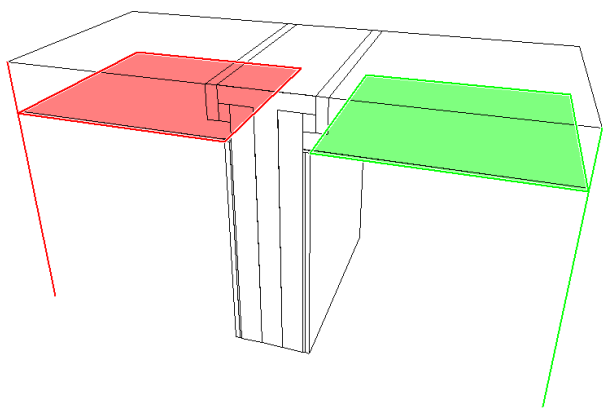

Areas

| No. | Xmin | Xmax | Ymin | Ymax | Zmin | Zmax | A [m²] |
|---|---|---|---|---|---|---|---|
| 1 | 0 | 3 | 0 | 1 | 1 | 1 | 1 |
| 2 | 10 | 13 | 0 | 1 | 1 | 1 | 1 |
| 3 | 0 | 0 | 0 | 0 | 0 | 0 | 0 |

U Values

| No. | Xmin | Xmax | Ymin | Ymax | Zmin | Zmax | U [W/m²K] | Enforced U [W/m²K] |
|---|---|---|---|---|---|---|---|---|
| 1 | 0 | 0 | 0 | 0 | 0 | 6 | 0.148 | |
| 2 | 13 | 13 | 0 | 0 | 0 | 6 | 0.148 | |
| 3 | 0 | 0 | 0 | 0 | 0 | 0 | 0.000 | |

**Figure 123: Areas and 1D U-values of flanking element for analysis**

### Step 6: Define derived thermal properties and run the calculation

- Choose the output required to calculate from the analysis (Ψ-value / temperature factor ($f_{Rsi}$)).
  *Edit → Derived Thermal Properties…*

- Prepare the grid for analysis using 'Auto split' and then run the calculation.
  *Grid → Auto split…* (see section 2.2 for parameters)

**Note, as per BR497:**

- The length of flanking element of roof and wall is 1000mm or 3 times the thickness; whichever is greater.
- The indoor boundary conditions are defined with 2 colour types: horizontal (174) and upward heat flow (190) (see Figure 121): party wall insulation at rafter level – Junction P5
- For internal partitions within the same dwelling (or premises), the length lw over which the U-value applies includes the thickness of the partition wall.
  lw = a + b + c
- For a party wall between dwellings (or premises), the length lw over which the U-value applies is doesn't include the thickness of the party wall.
  lw = a + b with half of Ψ allocated to each dwelling (or premises).

**Calculated Result from the analysis:**

Linear thermal transmittance (Ψ) from software = 0.115 W/mK

$$\Psi = \frac{\phi}{(Ti - Te)} - U1 \times A1 - U2 \times A2 = \frac{8.244}{(20 - 0)} - 0.148 \times 1 - 0.148 \times 1 = 0.115 \text{ W/mK}$$

linear thermal transmittance for the junction (between 2 dwellings) = Ψ/2 = 0.0575 W/mK

Temperature factor ($f_{R_{si}}$)= 0.949 (Check section 2.5 for critical temperature factors $f_c$)

**Default Ψ (as per SAP version 10.2)**

Roof/Party wall insulation at ceiling level = 0.48 W/mK

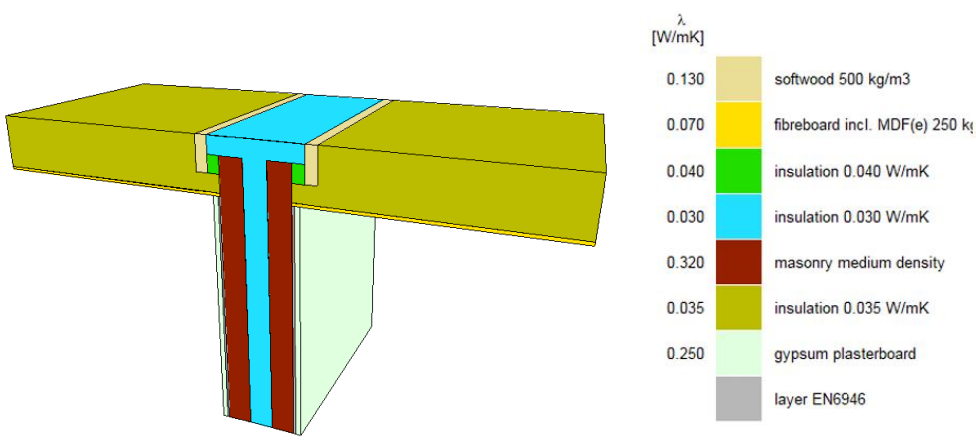


**Figure 124: Material properties**

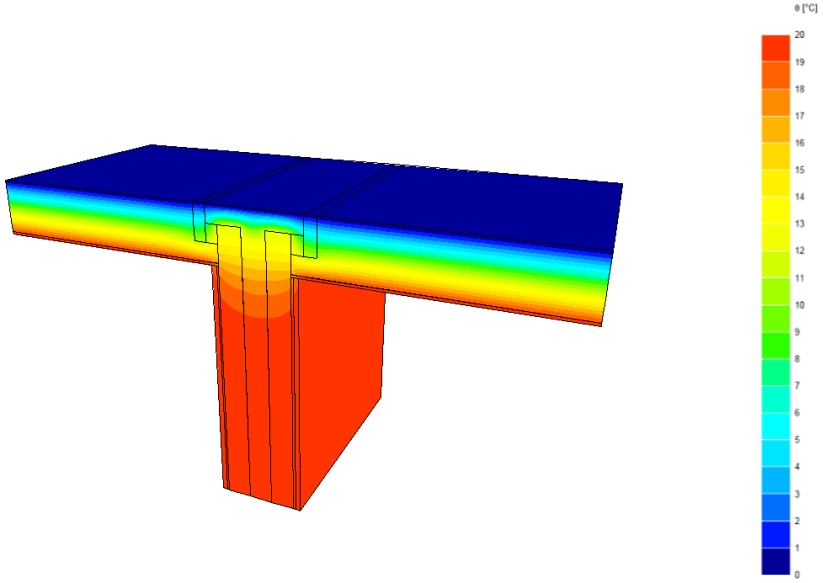


**Figure 125: Isotherms**